Switch Disconnector and Air Circuit Breaker



... with Power Xpert Releases PXR

Product Catalog

Powering Business Worldwide



* At Eaton, we believe that power is a fundamental part of just about everything people do. That's why we're dedicated to helping our customers find new ways to manage electrical, hydraulic and mechanical power more efficiently, safely and sustainably. To improve people's lives, the communities where we live and work, and the planet our future generations depend upon. Because this is what really matters. And we're here to make sure it works.

To learn more go to: Eaton.com/whatmatters

EATON
Powering Business Worldwide

We make what matters work.

Safety - individual solutions combined with IZM32

Adding individual solutions to IZM32/IN32 circuit breakers provides both more protection for systems and more safety for personnel in case there is a failure. And it also reduces the risk of unintended interruptions of operation.

These solutions include:

- Arcflash Reduction Maintenance System™
- ARCON®
- Zone selectivity
- Remote switching
- Testing and documenting with PXPM



Arcflash Reduction Maintanance System™

Eaton's patented Arcflash Reduction Maintenance System technology provides maintenance staff improved safety of downstream maintenance locations using a simple and reliable method to reduce fault clearing times and energy in an arc flash event (radiation, sound, pressure, temperature).

Arcflash Reduction Maintenance System™ uses a separate analog trip circuit providing faster signal processing and interruption times than the standard (digital) "instantaneous" protection.

The Arcflash Reduction Maintenance System™ function is activated either directly on the circuit breaker through a local switch or remotely through communications or a contact input.

Arcflash Reduction Maintenance System™ is optional on both PXR20 and PXR25 trip units.



ARCON®

IZM32 breakers, combined with ARCON®, help users to avoid damage and to protect people against arc faults as they can effectively be brought under control within 2 ms.
They also protect against arc flashes that – due to their impedance - would not even cause a protective device to react.

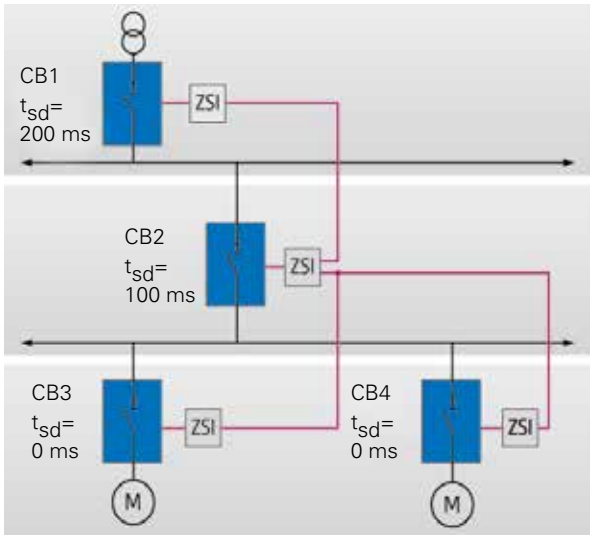

Zone selectivity ZSI

Now always on board an can be enabled.

Circuit breakers are directly connected to a signal line, without any additional modules. So, in case of short circuits, they ensure that only the circuit breaker immediately upstream the point of failure will break a short-circuit without delay.

The advantage of the zone selectivity feature – compared to ordinary time selectivity - is the significantly reduced delay time until tripping.

This reduces the thermal and dynamical load that protect the system in addition. In cases of a signal wire damage the back-up time selectivity ensures the selectivity of the system.

For additional safety of maintenance staff we recommend a combination with Arcflash Reduction Maintenance System™ to reduce the released amount of energy even further.



Breaker rear side (Drawout breaker)

Easy inspection and maintenance

Inspection and maintenance can be conveniently performed on the drawout breaker as the primary finger clusters and levering mechanism are part of the breaker instead of the cassette.

Eaton also offers many field installable accessories and parts, extending the life of the breaker.

The next generation trip unit platform: Power Xpert Release (PXR)

The higher resolution dot matrix display has been enhanced to be always active, constantly displaying the status of zone selectivity (ZSI), battery condition and rated current In. All data can be transferred via Modbus, Profibus or Ethernet communication function and for security, a password can be added to avoid unauthorised changes. In addition, a QR code has been added for easier identification and to access additional information.

Power Xpert Release (PXR) with multiple new features



- Modbus on board for PXR25 (optional for PXR20)
- Large LCD combined with cursor operation for more function and information
- Battery status, ZSI and In visible anytime
- ZSI – the better selective protection is always on board
- Password protection
- Rating plug programmable
- LSI protection can be changed to LI (without time selectivity T_{sd} = 0) or LS (without Instantaneous I_i = 0 ^100% selective)
- 3 free alarm contacts available
- USB port for testing and additional function setup via PC and software PXPM



- Improved Diagnostics with breaker health (graph), events and run time

Software Power Xpert Protection Manager (PXPM) for interaction with PXR



- Dis-/enable functions
- Reading/Changing settings (not basic protection settings)
- Waveform capture
- Multiple test procedures with final test protocol print including date/time stamp
- Print settings and curves

Using the software is easy and self explaining. The cursor above a select able function opens a window with its explanation. Depending on the selection next logical selection opens.

Testers no longer require specialized test tools thanks to the much better software solution in combination with the integrated secondary injection test hardware.

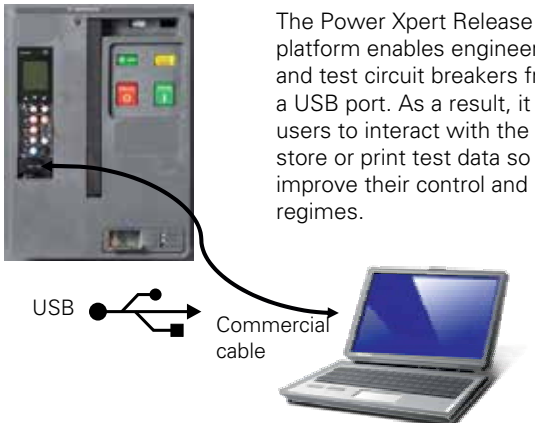

The Power Xpert Release trip unit platform enables engineers to configure and test circuit breakers from a PC via a USB port. As a result, it is easier for users to interact with the trip unit and store or print test data so they can improve their control and maintenance regimes.

Load your settings and record them.

If any values are changed a "final setting adjustments" screen shows the original and revised settings, highlighting any that were modified. The sheet can be saved or printed.



High current circuit breakers, for example those used in high power distribution systems in industry, are configured and periodically tested by end users to ensure they continue to work reliably in case of over-currents, and therefore prevent expensive downtime. This new unit allows technicians to simulate or inject overloads, short circuits, ground faults , do internal current transformer test including its wiring, test with or without tripping and much more using the Software Power Xpert Protection Manager (PXPM).

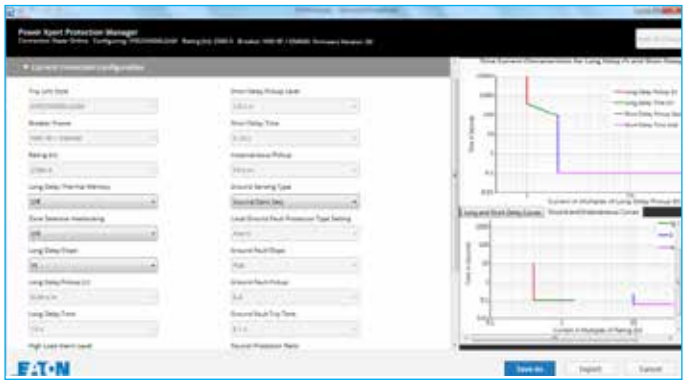

Dis-/Enable or change settings, enlarge tripping curves and print curves for documentation.

Utilizing the easy-to-use dashboard, Control Mode can be selected allowing diagnostic and meter data to be reset. In Test Mode individual phases can be tested against values entered as current value or as a multiplier of individual settings.

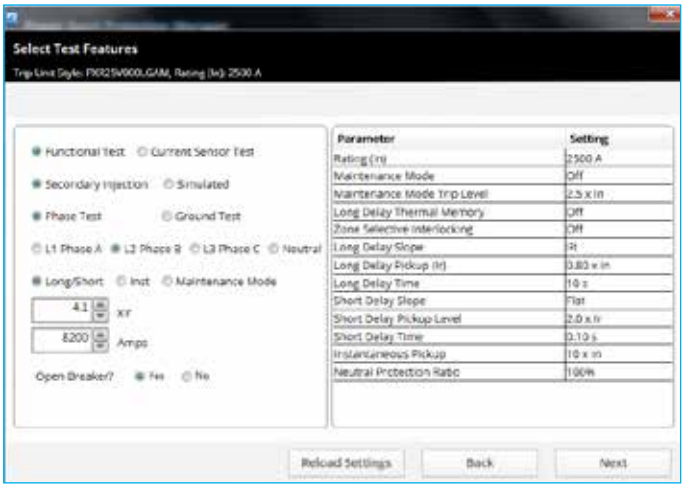

Select the function you want to test and choose the test current as value or multiplier of setting.

The unit has been developed in response to user demand for an easy-to-use system. Previously test data had to be written down, but with the upgraded software a three page professional test report with date/time stamp, customized information, individual settings/ tripping curves and secondary injection test result, can be generated and stored electronically in a pdf format. This enables technicians to significantly reduce the time it takes for testing, makes it much easier for them to carry out their maintenance, and receive a test report for documentation.

Prior to printing the test report, the customer name, location, environment and equipment condition can be entered.

Report professional all your test results within one document after installation in your system or report your yearly inspection that might be requested in your company.

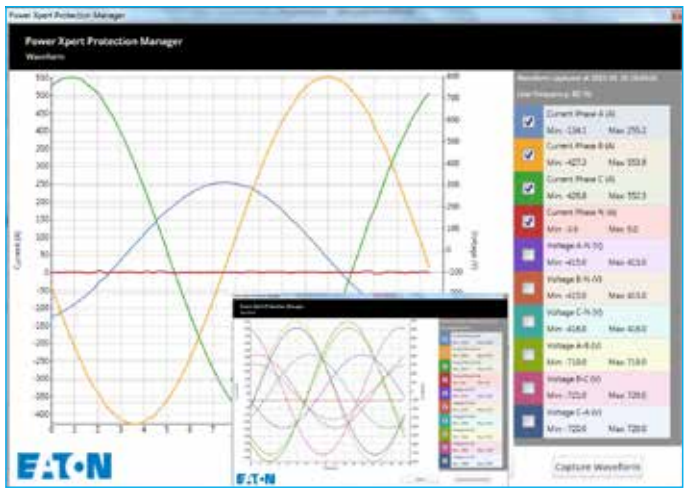

Get additional information by capturing the waveform and select which curves shall be visible or be printed.

New features include the ability to capture current and optional voltage waveforms along with minimum and maximum values for the phase and neutral conductors. In addition, the waveform can give an indication of the overall quality caused by harmonics, and metering accuracy is now one per cent “of reading”.

5 tests are possible. For more tests and other function packages generate the request file in PXPM (go to application settings and then license), then in the webstore http://eaton.mybigcommerce.com/power-xpert-protection-manager/ click the link for the testing software that you require and upload the PXPM generated request file. Add to cart and checkout, you will then get an email during U.S. business hours, save that file and then load it into PXPM.





IZM32 circuit-breakers, IN32 switch-disconnectors, up to 4000 A

Eaton's series IZM32/IN32 is an innovative line of circuit-breakers up to 4000 A. Engineering and mounting requirements are reduced thanks to the modular design and standard accessories. The highlight of the series IZM32/IN32: The trip unit family PXR trip electronics. It covers a huge amount of applications. And in conjunction with an optional communication on board ensures that operation can be monitored from all round the globe.

Series IZM32/IN32 in standard offer up to 690 V
Rated operational current from 800 to 4000 A, switching capacity Icu = Ics from 66 to 100 kA/440 V AC, 3 or 4 pole, fixed mounted or withdrawable, electronic releases for multiple protection requirements and several additional options.

Extensive mounting accessories for fixed mounting and withdrawable units
Motor operator IZM...M... +++ Shunt release IZM...ST... +++ Closing release IZM...-SR... +++ Undervoltage release IZM...-UV... +++ Auxiliary contact ON-OFF IZM...-AS... +++ Latch check switch IZM...LCS... +++ Overload trip switch IZM...-OTS +++ Mechanical interlocks and much more.

Control unit family
The PXR control unit is the answer on the market request of doing individual tests in the field and document it. Therefore Eaton provides an USB link in the trip unit front to be able to correspondent with PC in conjunction with a free download able Power Xpert Protection Manager software.

Further more the PXR control unit offers an extensive range of functions. Protection, measuring, analysis, diagnostics and event memory functions that can be shown on an LCD display or transferred remotely via an integrated communication system, displayed on a web page or sent worldwide by email. PXR can be integrated in different data networks together with Eaton's plug & play communication solution: MODBUS, PROFIBUS or Ethernet. Circuit breakers can then be monitored directly via the Internet.

Worldwide novelty Arcflash Reduction Maintenance System™ – greater safety for maintenance personnel
In the event of an arc fault the patented Arcflash Reduction Maintenance System™ trips faster than a short-circuit release. In conjunction with the series IZM32/IN32, additional components of the ARCON™ arc fault protection system offer additional arc fault protection.

Air Circuit Breakers IZM32/IN32

Contents

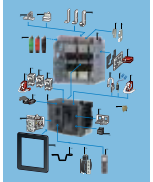







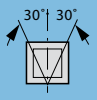

Circuit breakers IZM32, switch-disconnectors IN32 up to 4000 A

System overview

IZM32 circuit breakers and accessories	1
Key to type references	2

Technical overview

Technical data breaker	3
Technical Data breaker Trip-unit	4
Zone selective interlocking	5

Description

System features	6
Components for communication	7
Catalog number selection	8

Ordering

Basic devices	
Circuit breakers IZM32, 3 and 4 pole	9
Switch-disconnectors IN32, 3 and 4 pole	13
Electronic Releases	
Trip units V, P	15
Communication modules	16
Accessories for electronic releases	
Voltage transformer	16
Current sensor for neutral conductor	16
Withdrawable units	
Cassettes	17
Secondary terminal block kit	17
Safety shutters, Cell switches	17, 18
Electrical accessories	
Motor operator & operation counter	19
Shunt releases	20
Closing releases	21
Undervoltage releases	22
Time delay modules	22

Ordering

Electrical accessories	
Auxiliary contacts & latch check switches	23
Overcurrent Trip switches	23
Interlocked Trip Indicators	23
Remote reset	24
Mechanical accessories	
Locking ON/OFF buttons & Cassette locking	25
Main terminal kit	26
Door cover	23
Mechanical interlock, fixed and d/o mounting	27
Cable kits for mechanical interlock	27

Engineering

Mechanical Interlock configurations	28
Terminal assignment of control circuit terminals	29
Terminal assignment of communication wiring	30
Tripping characteristics	31
Selectivity tables	41

Technical data

Circuit breakers IZM32	45
Switch-disconnectors IN32	50
Electrical accessories	54
Motor operators, altitude rating factors	55, 56
Communication modules	56

Dimensions

Circuit breaker IZM32, switch-disconnector IN32	
Fixed mounted	57
Withdrawable units	62
Minimum clearances	68

System overview

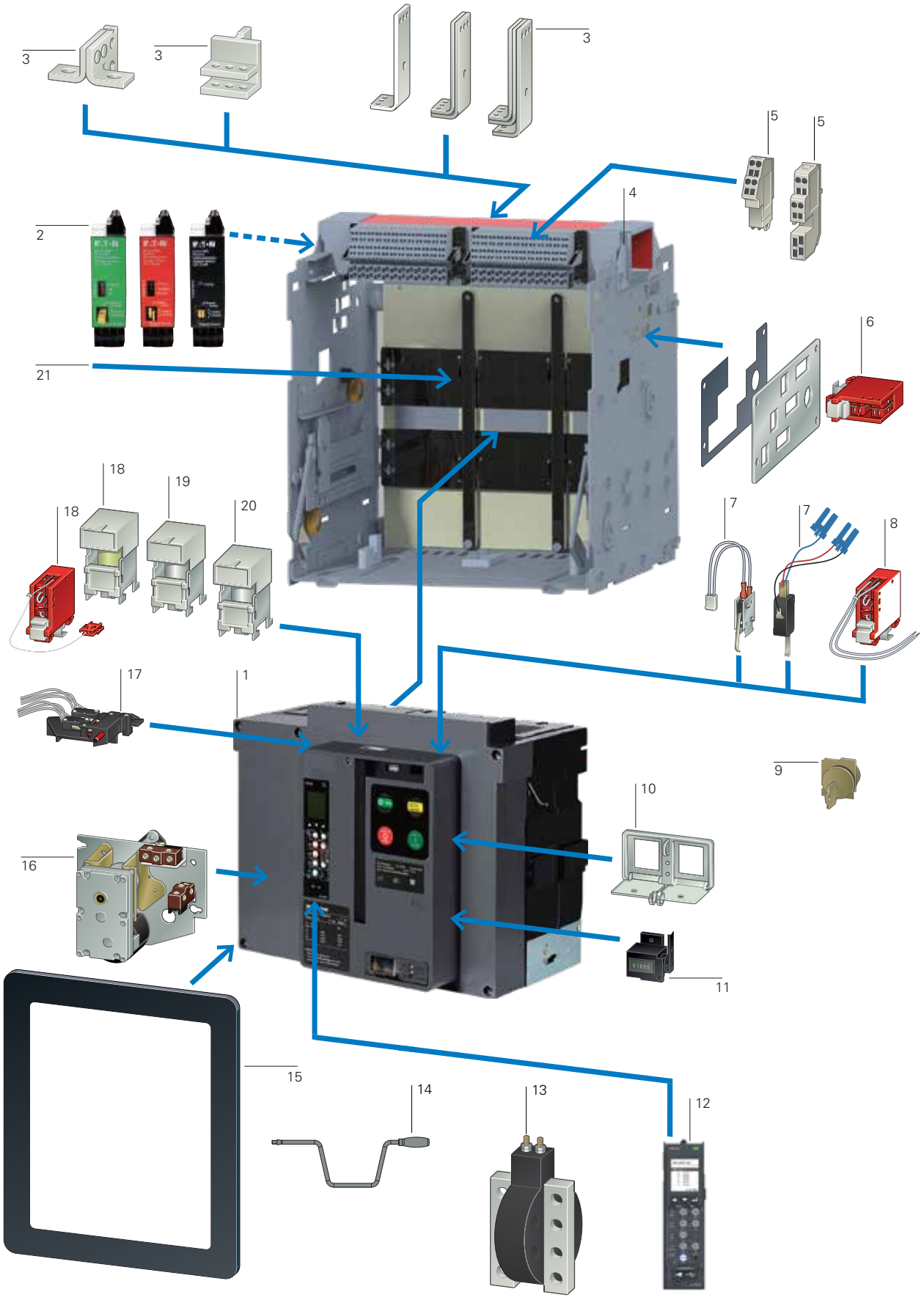

IZM32/IN32 air circuit breaker 1
IZM32/IN32: 800 - 4000A

Communication modules 2
Profi bus DP, Ethernet and Modbus onboard

Main circuit wiring terminal 3
Vertical wiring terminal 3/4P

Cassettes for withdrawable units 4
With complete set of control terminals

Control circuit terminal units 5
Secondary circuit wiring terminal blocks

Position cell switches 6
Cell switch signals the position of the breaker inside of the cassette.
Connect, Test and Disconnect Position

Latch check switch 7
For external application usage or with closing release

Standard auxiliary contact, 4CO 8
Signaling switch ON-OFF.
4 ONs and 4 OFFs standard. 12 ONs and 12 OFFs maximum

Key locking 9
Locking of the breaker by a keylock.

Locking facilities 10
Padlocable plastic or metal front covers for ON-OFF pushbuttons

Switching operations counters 11
Counts the number of operations

Spare Trip unit 12
PXR20, V-type, current metering
PXR25, U-type, power metering

Current sensor for neutral conductor 13
Current sensor for sensing the neutral-conductor current.

Levering tool 14
Lev-in tool to move the breaker in and out of the cassette. Standard Omega shaped handle is included in the breaker

Door escutcheon 15
Closes the gap between Breaker and Switchgear-door IP41

Motor operator 16
Automatic charging of the spring force storage for remote or local operations

Red-pop trip indicator 17
Red-pop trip indicator signals a trip by the trip unit
Included in breaker with trip unit
Trip signal auxiliary contact
OTS, 2CO

Shunt releases 18
Opens the breaker by an electrical signal.

Closing releases 19
Closes the breaker by an electrical signal.

Undervoltage releases 20
Opens the breaker by a voltage-drop in the control circuit

Cassette safety shutters 21
Shutters for 3- and 4- poles cassettes



			IZM32		
General					
Standards			IEC/EN 60947		
Ambient temperature	Storage	°C	-20 - +70		
	Operating (open)	°C	-20 - +70		
Mounting position				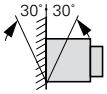	
Utilization category			B		
Protection type			IP20, IP55 with protective door cover		
Environment humidity			Comply with GB / T2423.4 Alternating Humidity and Heat Test +55 °C, Relative Humidity 95%, Non-condensing (exceeding standards, cabinet needs to be protected)		
Direction of incoming supply			As required		
Switching capacity					
Rated Current (I_n)			800A, 1000A, 1250A, 1600A, 2000A, 2500A, 3200A, 4000A		
Type of circuit breaker			B	N	H
Rated impulse withstand voltage (U_{imp} , VAC)			12000	12000	12000
Rated insulation voltage (U_i , VAC)			1000	1000	1000
Rated operational voltage (U_e , VAC)			690	690	690
Ultimate breaking capacity (I_{cu} , kA)	440V 50/60Hz		66	85	100
	690V 50/60Hz		66	85	85
Rated service breaking capacity (I_{cs} , kA)	440V 50/60Hz		66	85	100
	690V 50/60Hz		66	85	85
Rated short-time withstand current (I_{cw} , kA)	1s/3s		66	85	85
Rated short-circuit making capacity (I_{cm} , kA)	440V 50/60Hz		145	187	220
	690V 50/60Hz		145	187	187
Operating delays (ms)	Closing delay		35		
	Opening delay		30		
Maximum operating frequency (Operations/h)			60		
Durability and installation characteristics					
Lifespan			**800-4000A**		
	Mechanical, w/o maintenance		12500	10000	10000
	Mechanical, w/maintenance		25000	20000	20000
	Electrical, w/o maintenance		10000	10000	8000[1)]
Dimensions (H × W × D, mm)	Fixed 3P		461×431×372		
	Fixed 4P		461×558×372		
	Withdrawable 3P		486×450 ×474		
	Withdrawable 4P		486×577×474		
Weight (kg)	Fixed 3P/4P		68/86		
	Withdrawable 3P/4P		86/112		

Notes: [1)]5000 operations at 4000A

	Standard plus Selective Protection	**Power/Energy Protection**
		
	V Type (PXR20) IZMX-PXRV IZM32…V…	**P Type (PXR25) IZMX-PXRP IZM32…P…**
Protection functions	LI, LSI; LSIG/LSIA (Optional)	LI, LSI; LSIG/LSIA (Optional)
Overload protection (L)		
Slopes	$I^{0.5}t$, It, I^2t, I^4t	$I^{0.5}t$, It, I^2t, I^4t
Overload trip (I_r), × In	0.4, 0.5, 0.6, 0.7, 0.75, 0.8, 0.9, 0.95, 0.98, 1.0	0.4, 0.5, 0.6, 0.7, 0.75, 0.8, 0.9, 0.95, 0.98, 1.0
Long delay time t_r ($6 \times I_r$)	0.5, 1 , 2, 4, 7, 10, 12, 15, 20, 24 s	0.5, 1 , 2, 4, 7, 10, 12, 15, 20, 24 s
Short-time delayed short-circuit protection (S)		
Short delayed pickup (I_{sd}), × I_r	1.5, 2, 2.5, 3, 4, 5, 6, 7, 8, 10	1.5, 2, 2.5, 3, 4, 5, 6, 7, 8, 10
Short delay time, flat characteristic curve (t_{sd})	0.0, 0.1, 0.2, 0.3, 0.4, 0.5 s [1]	0.0, 0.1, 0.2, 0.3, 0.4, 0.5 s [1]
Short delay time at 8 × Ir, I^2t curve (t_{sd})	0.1, 0.3, 0.4, 0.5 s	0.1, 0.3, 0.4, 0.5 s
Non-delayed short-circuit protection (I)		
Non-delayed pickup (I_i), × I_n	OFF, 2, 4, 5, 6, 7, 8, 10, 12, 15	OFF, 2, 4, 5, 6, 7, 8, 10, 12, 15
Optional ground fault protection (G)		
Ground/Earth fault alarm (A), × I_n	0.2, 0.4, 0.6, 1.0	0.2, 0.4, 0.6, 1.0
Ground/Earth pickup (I_g), × I_n	OFF, 0.2, 0.4, 0.6, 0.8, 1.0	OFF, 0.2, 0.4, 0.6, 0.8, 1.0
Short delay time, flat characteristic curve (t_g)	0.1, 0.2, 0.3, 0.4, 0.5 s	0.1, 0.2, 0.3, 0.4, 0.5 s
Short delay time at 0.625 x I_n, I^2t curve (t_g)	0.1, 0.2, 0.3, 0.4, 0.5 s	0.1, 0.2, 0.3, 0.4, 0.5 s
Over-temperature trip	●	●
Thermal memeory	●	●
Zone selectivity ZSI (see next page)	●	●
Making current release (MCR)	●	●
Further functions		
System diagnostic		
Status/Overload LED	●	●
Cause of trip LEDs	●	●
Current at trip point (display indication)	●	●
High load or ground fault alarm contact	●	●
System monitor		
LCD display	●[2]	●[2]
Current metering accuracy ±1% of Reading	±1% of Reading	±1% of Reading
Voltage (%) L to L	–	±1% of Reading [3]
Power and energy (%)	–	±2% of Reading [3]
Apparent power kVA and demand	–	●[3]
Reactive power kVAR	–	●[3]
Power factor	–	●[3]
Communications		
Onboard (ModBus)	○	●
External (CAM Module)	○	○
Power supply requirement	+24 V DC, optional	+24 V DC, optional
Additional funtions		
Test Capability	Integral, PC+Power Xpert (free Download)	Integral, PC+Power Xpert (free Download)
Maintenance Mode Arc Flash Reduction Maintenance System™	○	○
Trip log	●	●
Electronic operations counter	●	●
Waveform capture	●	●
Breaker health monitor	●	●

Notes

[1] 0.1s: trip time is 0.06s to 0.1s; 0s: nominal clear time is 25 ms to 85 ms with or without auxiliary power

[2] Requires external 24VDC control voltage supply when continuous current below 20% of I_n

[3] Requires external PT module(IZMX-PXR-PTM-1) for voltage sensing input to trip unit

● Standard ○ Optional – not available

Selectivity-improved with ZSI function

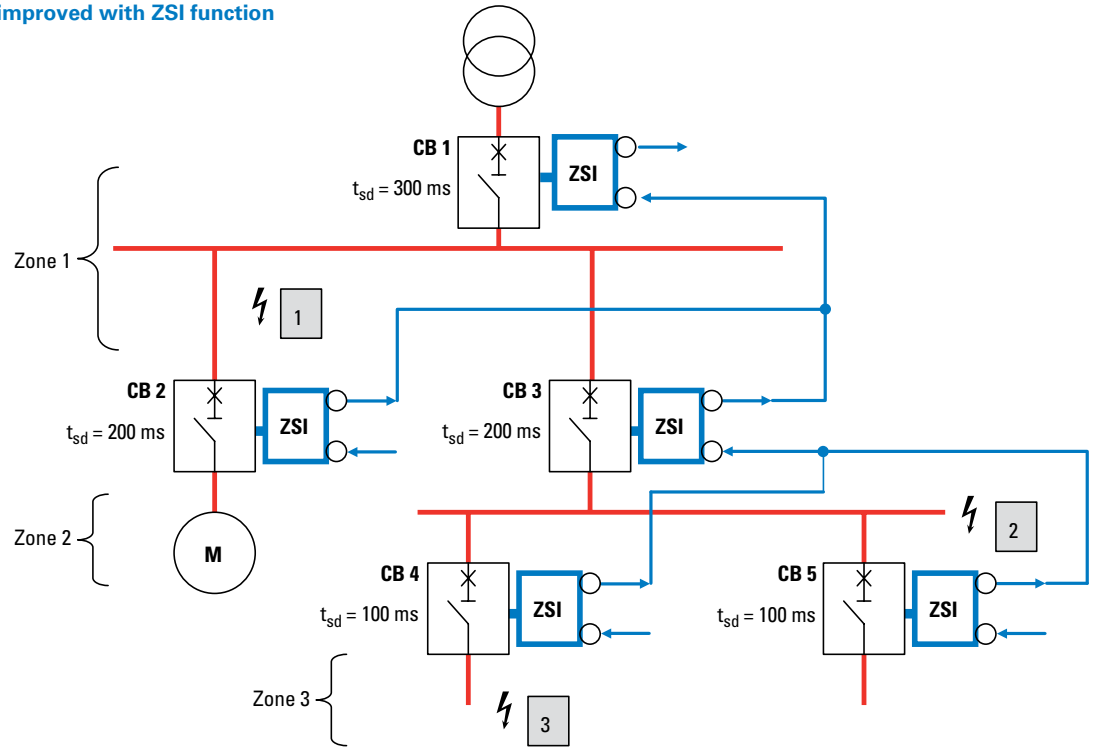

CB = **C**ircuit **B**reaker
ZSI = **Z**one **S**elective **I**nterlocking

Zone Selective Interlocking (ZSI)

- Zone Selective Interlocking is described in the standard IEC 61912-2 Low voltage switchgear and controlgear.
- The term zone selective interlocking is used to describe a method of controlling circuit breakers to provide selectivity with very short interruption times for the breaker closest to the fault.
- There are different levels (zones) of protection that isolate the fault in the distribution system.
- ZSI may be applied for faults between phases or earth faults or both.
- ZSI is applied to the short time faults where time selectivity can be achieved with the breakers between the zones.
- Because ZSI does not require auxiliary power or additional modules to operate set up time is minimal and application is easy.

Zone Selective Interlocking (ZSI) Example

Example A – Short-circuit at position 3

- Circuit breakers CB1, CB3, CB4 all see the short circuit current and register a short delay pickup.
- Circuit breaker CB4 sends a ZSI output blocking signal to CB3 ZSI input. CB3 sends a ZSI output blocking signal to CB1 ZSI input. CB1 sends a ZSI output signal that is not wired. This signal could be wired to a MV relay on the other side of the transformer with a compatible ZSI circuitry.
- CB1 registers the ZSI input signal and starts its timer for 300ms. CB3 registers the ZSI input signal and starts its timer for 200ms. CB4 gets no input from any lower zone circuit breaker. This breaker will then trip immediately without any time delay. CB4 interrupts the fault and CB1 and CB3 stop short delay timing because the fault current is gone.
- If for some reason CB4 does not open and interrupt the fault then at the end of the its short delay time CB3 will open and interrupt the fault.

Example B – Short-circuit at position 2

- Circuit breakers CB1, CB3, see the short circuit current and register a short delay pickup. CB4 and CB5 do not see the fault current and do not send a ZSI output.
- Circuit breaker CB3 sends a ZSI output blocking signal to CB1 ZSI input. CB1 sends a ZSI output signal. In this example that signal is not wired.
- CB1 registers the ZSI input signal and starts a timer for 300ms. CB3 gets no input from any lower zone circuit breaker. This breaker will then trip immediately without any time delay. CB3 interrupts the fault and CB1 stops short delay timing because the fault current is gone. The clearance time is reduced by approximately 150ms.

Example C – Short-circuit at postion1

- Only circuit breaker CB1sees the short circuit current and registers a short delay pickup. CB2, CB3, CB4 and CB5 do not see the fault current and do not send ZSI outputs.
- CB1 sends a ZSI output signal. In this example that signal is not wired.
- CB1 gets no input from any lower zone circuit breaker. This breaker will then trip immediately without any time delay. CB1 interrupts the fault and the clearance time is reduced by approximately 250ms.

Air Circuit Breaker IZM32

Eaton's IZM32, circuit-breakers offer a proven and complete range of air circuit-breakers up to 4000 A. Four sizes enable the ideal circuit-breaker to be selected economically for any project. In this way, only the module width increases with the required rated operational current, enabling the most compact and economical size to be selected.
The particularly rugged circuit-breakers are already in use 100,000 times in harsh industrial environments worldwide. Large material thicknesses and a high short-time withstand current are its characteristic features.

Applications

The circuit-breakers can be used in four main application areas depending on the type of equipment to be protected:
- System protection,
- Motor protection,
- Transformer protection,
- Generator protection.

These key applications make different These key applications make different demands on the switches, which are met with a range of trip units.

Switches with Closing Release

They are particularly suitable for synchronization tasks.

Coupler Switches

Beside the IZM32. circuit-breakers, IN32 switch-disconnectors are available. These are used, for example, as coupler switches between different power supplies.

Modular Design

Because components are installed from the front, retrofitting accessories is especially quick and easy. This allows flexible response to changing requirements within the system.

Communication Capability

The communication capability of the IZM32 type circuit-breakers opens new possibilities in power distribution system. It provides all important operational information and passes this on. This increases system transparency and shortens the response times to states such as overcurrent, phase asymmetry and overvoltage. A rapid intervention in a process can, for example, prevent downtimes and help to schedule maintenance activities and therefore boost plant availability.
In addition to Modbus interface, the Profibus interface is offered.

Standard Scope of Delivery as Usual for IZM32/IN32

- With the IZM32, you select a basic device that is already fitted with an electronic trip unit (no horizontal or vertical wiring terminals equipped, to be supplied to your request)
- Horizontal mounting wiring is standard in the switching cabinet
- With four-pole devices, the neutral conductor is arranged on the left (front view).
- The neutral conductor can be loaded 100% like the phase conductors
- The circuit breakers are provided with a standard mechanical reclosing lockout. After an overload trip, the fault is usually examined first. After the fault is identified and rectified, the mechanical reclosing lockout is reset by pressing the red mechanical trip indicator on the front of the circuit-breaker.
- An "Automatic Reset" can be ordered as an option. This enables the circuit-breaker to be restored to operation immediately at any time after the spring-operated stored energy mechanism is re-tensioned. In these applications, compulsory fault analysis is intentionally avoided.
- The number of terminals on the terminal bars of the secondary control circuit depends on the accessories fitted.
- 4 COs are provided instead of 2 NOs and 2 NCs
- A coding mechanism between the basic device and the cassette prevents impermissible combinations ("Rejection Interlock").

Expanded Standard Scope of Delivery for IZM32

The following options are now already part of the standard scope of delivery:
- With withdrawable circuit breakers, the door escutcheon is supplied with the cassette option, with no separate ordering required
- On withdrawable units, the circuit breaker can be pulled out to inspect the arc chutes. With fixed units, it is recommended that sufficient space is provided above the circuit breaker to enable inspection. An additional cover is not required.
- All circuit breakers that are provided with protective trip unit function now feature a LCD display.
- On each circuit breaker, the electronic trip unit is factory fitted with a sealable protective cover.
- If a motor operator is ordered, the "Spring-operated stored energy tensioned" indicator auxiliary contact is automatically provided.

Arcflash Reduction Maintenance System™ Offers Increased Safety for Maintenance Staff

When equipped with the latest patented Arcflash Reduction Maintenance System™, the IZM32 circuit breakers can ensure immediate breaking in the case of arc flash fault. This is even faster than instantaneous short-circuit tripping.
When maintenance staff enter a hazardous area, the Arcflash Reduction Maintenance System™ function can be activated directly on the circuit breaker or through an external switch. In conjunction with IZM32, other components of the maintenance system enable an expansion of arc fault protection.

Selection Criteria for IZM32 type

Fundamental criteria for the selection of circuit-breakers:
- Max short-circuit current I_k max of the circuit-breaker' point of installation: this value determines the short-circuit breaking capacity or the short-circuit current carrying capacity of the circuit breaker. It is compared with the I_{cu}, I_{cs} and I_{cw} values of the switch and essentially determines its size (see Technical data)
- Rated operational current I_n which should flow through the respective branch circuit: this value must not be greater than the maximum rated operational current of the circuit breaker. The rated operational current can be adjusted down using additional rated operational current modules.
- Ambient temperature of the circuit breaker: this is generally the internal temperature in the control panel. Observe the derating values with increased ambient temperature (see Technical data).
- Circuit-breaker type: fixed mounted or withdrawable units, 3 or 4Ps.
- Minimum short-circuit current which flows through the switching device: the release must recognize this value as a short-circuit and may react with a trip.
- Protection functions of the circuit breaker is determined by the selection of the respective overcurrent release.

Other Benefits of the IZM32 type

- Some applications have demand on the trip unit to offer a power interface for connection to an external control voltage source (see below). A power supply of 240 VAC external control voltage can be equipped
- Based on different mounting positions, a switching operations counter can now be used independently of a motor operator.
- Withdrawable unit operation: The unit is actuated with a hand crank supplied. This is now possible also with a standard tool (square drive socket 3/8").
- A frame size is available, enabling to provide best devices for different applications. The rated operational voltage cover 800 to 4000A.
- Phase sequence of IZM32: (N) ABC
- Horizontal wiring is supplied as standard, thus simplifying the busbar connection in the switchgear system

External Control Voltage Supply

- The standard protection functions of the IZM32 circuit breakers operate generally independently of an external control voltage supply.
  The power supply of the electronics unit, for example for overload and short-circuit protection, is implemented via the current transformers integrated in the circuit breaker.
- The trip unit can be fed with an external 24VDC /48VDC or 240VAC supply if required so that the display function can also be used without a load. An external power supply is needed if communication functions are required.

Characteristic Curve Selection Options

The trip characteristics is selected to user settings and the relationship among circuit breakers. For more information, consult Eaton's Technical Support.

The energy reduction technology optimize safety for maintenance personnel

Personnel safety is of paramount importance in today's work environment. Of recent concern is the potential for serious injury due to exposure to electrical arcs. Eaton's IZM Series trip units offer the patented Arcflash Reduction Maintenance System™, which offers a non-delayed immediate disconnection in the event of an arc fault. This disconnection is even faster than that of a non-delayed short-circuit release. This function can be activated directly on the circuit breaker or via an external switch, such as when maintenance personnel enter a hazardous area.

Major Benefits of this maintenance system:

- Increased personnel safety – by limiting the available arc flash energy
- Simple to operate
- Enabled with circuit breaker door closed by a door mounted lockable switch
- Enabled only for the time required to perform the desired maintenance work
- Preserves overcurrent coordination under normal conditions
- Reduction in incident energy levels may permit reduced levels of Personal Protective Equipment (PPE), therefore improving worker comfort and mobility

Other components of the ARCON arc fault protection system, in conjunction with Series IZM, enable an expansion of arc fault protection in stages.

Selection criteria for circuit breakers

Fundamental criteria for the selection of circuit breakers:

- Max short-circuit current I_k m ax at the circuit breaker' point of installation: this value determines the short-circuit breaking capacity or the short-circuit current carrying capacity of the circuit breaker. It is compared with the Icu, Ics and Icw values of the switch and essentially determines its size (see technical data).
- Rated operational current I_n which should flow through the respective branch circuit: This value must not be greater than the maximum switch rated operational current of the circuit breaker. The rated operational current can be adjusted down using additional rated operational current modules.
- Ambient temperature of the circuit breaker: This is generally the internal temperature in the control panel. Observe the derating values with increased ambient temperature (see Technical data).
- Circuit breaker type: fixed mounted or withdrawable units, 3 or 4 pole.
- Minimum short-circuit current, which flows through the switching device: The release must recognize this value as a short-circuit and may react with a trip.
- Protection functions of the circuit breaker: This is determined by the selection of the respective overcurrent release.

For additional resources and tools for selecting Eaton Air circuit breakers please visit us as www.eaton.com/izm32.

Communication Options for IZM Series

With the respective communication module - PCAM, MCAM or ECAM (Profibus-DP / Modbus/ Ethernet Communications Adapter Module) - every circuit breaker of the IZM series is equipped for modern communication and is fit for the future. The databus not only allows to transmit information, but also to receive commands/settings.Onboard Modbus communication is standard on the PXR25 (P type) trip unit and optional on the PXR20(V type) trip unit upon order. Additional PCAM, MCAM or ECAM module can be installed externally for PXR25 to expand the communication capability. (No more than one external CAM module can be installed).

PROFIBUS-DP configuration

Dommunications module IZMX-PCAM has a 9-pin D-Sub socket for connection to PROFIBUS. The module works as a slave on PROFIBUS-DP; the data is defined through a standardized device master data file, which permits smooth integration of IZM in a DP line.

- On the PROFIBUS-DP side the module supports automatic baud rate detection; the PROFIBUS-DP bus address is set through the trip unit's display. The maximum cable length is 2.4 km.
- To operate the IZMX-PCAM, a supply voltage of 24 V DC is required.
- The data connection to the circuit breaker is implemented internally through a serial highspeed data connection.

Data access via PROFIBUS-DP

The data on PROFIBUS-DP are offered according to the profile for low-voltage switchgear (LVSG) of PROFIBUS International (PROFIBUS and PROFINET User Group). Five different data structures with varying numbers of parameters are available through the device master data file. This allows a data filter to be easily implemented, which simplifies integration of the IZM data into the control system.

Modbus configuration

The new PXR has an on board Modbus RTU controller. The device operates as a Modbus slave.

- Baud rate, data format and address (max. 247) for Modbus are set with the input keys of the trip unit. The maximum cable length is 1.2 km.
- The Modbus must be terminated with a 120 Ω terminating resistor.
- To operate the onboard Modbus, a supply voltage of 24 V DC is required.
- The data connection to the circuit breaker is implemented internally through a serial highspeed data connection.

Data access via Modbus

The data is contained in comprehensive data tables. Each data point is available as floating-point (IEEE) or fixed-point value. This variance allows the integration of the IZM32 to be adapted to the Modbus architecture. This enables a simple means of implementing a data filter, which facilitates the integration of IZM data in the control system.

Ethernet configuration

Communications module IZMX-ECAM has standard RJ45 socket for connection to Ethernet.

- IP address and related parameters are set through the trip unit's display.
- The data connection to the circuit breaker is implemented internally through a serial high speed data connection.
- To operate the IZMX-ECAM, a supply voltage of 24 V DC is required.

Data access via Ethernet

The data is contained in different web pages structured according to the topics „Data View", „Alarms", „Logs" and „Configuration". This variance allows the integration of the IZM to be adapted to all Ethernet networks supporting http protocol. An „around the world access" to the breaker becomes reality and using the SNMP protocol alarm messages can be transported everywhere.

Configuration



IZM32 Air Circuit Breakers Catalog Number

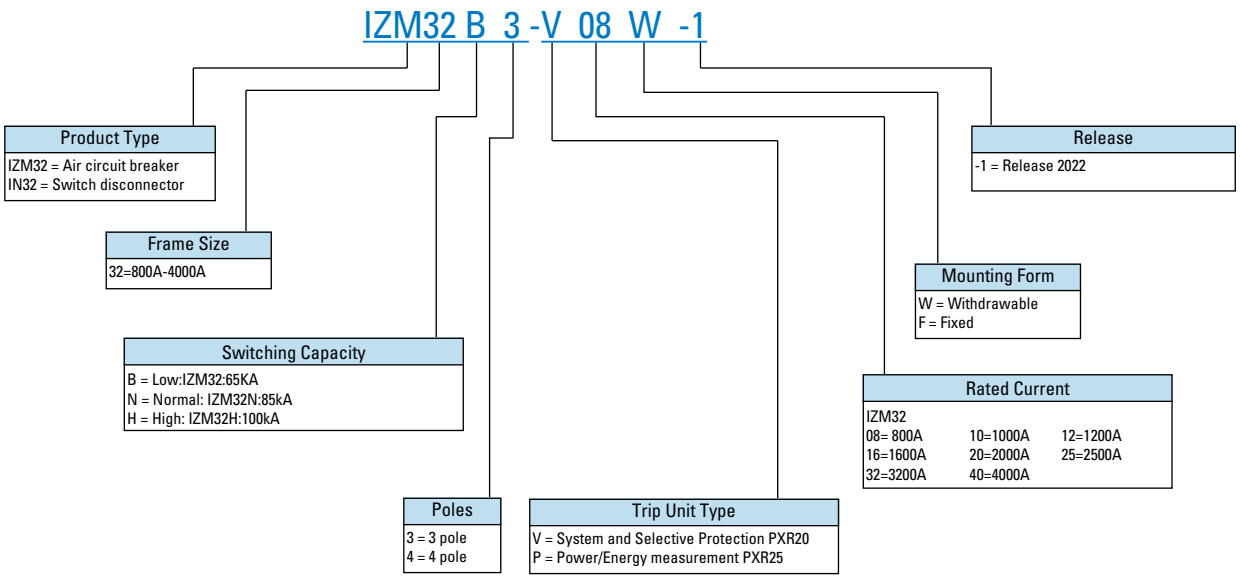

Selection Examples

IZM32 fixed 230VAC electrically operated example:

① IZM32B3-V08F-1	Fixed breaker, including 4 CO contacts
② IZM-TV323B-1600-1	Main terminal adapter – vertical
③ +IZM-M230AC-1	208-240 VAC Charging motor
④ +IZM-ST230AD-1	208-250VAC/DC Shunt trip
⑤ +IZM-SR230AD-1	208-250VAC/DC Closing (spring) release
⑥ +IZM-AS22-1	Additional 4CO contacts (8CO in total)
⑦ +IZM-OTS-1	Over current trip switch(OTS) 2CO

IZM32 withdrawable 230VAC electrically operated example:

① IZM32B3-V08W-1	Withdrawable breaker, including 4 CO contacts
② IZM-TV323B-1600-1	Main terminal adapter – vertical
③ +IZM-M230AC-1	208-240 VAC/DC Charging motor
④ +IZM-ST230AD-1	208-250VAC/DC Shunt trip
⑤ +IZM-SR230AD-1	208-250VAC/DC Closing (spring) release
⑥ +IZM-AS22-1	Additional 4CO contacts (8CO in total)
⑦ +IZM-OTS-1	Over current trip switch(OTS) 2CO
⑧ +IZM-CAS323-2000-1	Cassette
⑨ +IZM-SH323-1	Safety shutters

Notes All „+" articles are factory installed accessories and ready for use.
All accessory articles without „+" are complete „field kits".
THE KITS CONTAIN ALL REQUIRED PARTS, INSTALLATION INSTRUCTION IL AND IN CASE OF ELECTRICAL ACCESSORY THE CONTROL TERMINALS.

Switching capacity	Rated operational current	Frame size	Setting range			Fixed mounted	Withdrawable units	
			Overload release	Short-circuit releases		**Part no.** Article no.	**Part no.** Article no.	Std. pack
				Delayed	Non-delayed			
$I_{cu} = I_{cs}$	$I_n = I_u$		I_r	$I_{sd} = I_r$ x ...	$I_i = I_n$ x ...			
kA	A		A					

Circuit breaker for system and selective protection
With horizontal terminals as standard. For vertical termination see page 26





3 pole								
66	800	IZM32	320-800	1.5 - 10	2 - 15, OFF	**IZM32B3-V08F-1** 500170	**IZM32B3-V08W-1** 500171	1 off
	1000		400-1000			**IZM32B3-V10F-1** 500172	**IZM32B3-V10W-1** 500173	
	1200		500-1250			**IZM32B3-V12F-1** 500174	**IZM32B3-V12W-1** 500175	
	1600		640-1600			**IZM32B3-V16F-1** 500176	**IZM32B3-V16W-1** 500177	
	2000		800-2000			**IZM32B3-V20F-1** 500178	**IZM32B3-V20W-1** 500179	
	2500		1000-2500			**IZM32B3-V25F-1** 500180	**IZM32B3-V25W-1** 500181	
	3200		1280-3200			**IZM32B3-V32F-1** 500182	**IZM32B3-V32W-1** 500183	
	4000		1600-4000			-	**IZM32B3-V40W-1** 500184	
85	800	IZM32	320-800	1.5 - 10	2 - 15, OFF	**IZM32N3-V08F-1** 500290	**IZM32N3-V08W-1** 500291	
	1000		400-1000			**IZM32N3-V10F-1** 500292	**IZM32N3-V10W-1** 500293	
	1200		500-1250			**IZM32N3-V12F-1** 500294	**IZM32N3-V12W-1** 500295	
	1600		640-1600			**IZM32N3-V16F-1** 500296	**IZM32N3-V16W-1** 500297	
	2000		800-2000			**IZM32N3-V20F-1** 500298	**IZM32N3-V20W-1** 500299	
	2500		1000-2500			**IZM32N3-V25F-1** 500300	**IZM32N3-V25W-1** 500301	
	3200		1280-3200			**IZM32N3-V32F-1** 500302	**IZM32N3-V32W-1** 500303	
	4000		1600-4000			-	**IZM32N3-V40W-1** 500304	
100	800	IZM32	320-800	1.5 - 10	2 - 15, OFF	**IZM32H3-V08F-1** 500230	**IZM32H3-V08W-1** 500231	
	1000		400-1000			**IZM32H3-V10F-1** 500232	**IZM32H3-V10W-1** 500233	
	1200		500-1250			**IZM32H3-V12F-1** 500234	**IZM32H3-V12W-1** 500235	
	1600		640-1600			**IZM32H3-V16F-1** 500236	**IZM32H3-V16W-1** 500237	
	2000		800-2000			**IZM32H3-V20F-1** 500238	**IZM32H3-V20W-1** 500239	
	2500		1000-2500			**IZM32H3-V25F-1** 500240	**IZM32H3-V25W-1** 500241	
	3200		1280-3200			**IZM32H3-V32F-1** 500242	**IZM32H3-V32W-1** 500243	
	4000		1600-4000			-	**IZM32H3-V40W-1** 500244	

Circuit breaker with power and energy metering
Only one voltage transformer PTM for 1-16 breakers required. With horizontal terminals as standard. For vertical termination see page 26

3 pole								
66	800	IZM32	320-800	1,5 - 10	2 - 15, OFF	**IZM32B3-P08F-1** 500155	**IZM32B3-P08W-1** 500156	1 off
	1000		400-1000			**IZM32B3-P10F-1** 500157	**IZM32B3-P10W-1** 500158	
	1200		500-1250			**IZM32B3-P12F-1** 500159	**IZM32B3-P12W-1** 500160	
	1600		640-1600			**IZM32B3-P16F-1** 500161	**IZM32B3-P16W-1** 500162	
	2000		800-2000			**IZM32B3-P20F-1** 500163	**IZM32B3-P20W-1** 500164	
	2500		1000-2500			**IZM32B3-P25F-1** 500165	**IZM32B3-P25W-1** 500166	
	3200		1280-3200			**IZM32B3-P32F-1** 500167	**IZM32B3-P32W-1** 500168	
	4000		1600-4000			**-**	**IZM32B3-P40W-1** 500169	
85	800	IZM32	320-800	1,5 - 10	2 - 15, OFF	**IZM32N3-P08F-1** 500275	**IZM32N3-P08W-1** 500276	
	1000		400-1000			**IZM32N3-P10F-1** 500277	**IZM32N3-P10W-1** 500278	
	1200		500-1250			**IZM32N3-P12F-1** 500279	**IZM32N3-P12W-1** 500280	
	1600		640-1600			**IZM32N3-P16F-1** 500281	**IZM32N3-P16W-1** 500282	
	2000		800-2000			**IZM32N3-P20F-1** 500283	**IZM32N3-P20W-1** 500284	
	2500		1000-2500			**IZM32N3-P25F-1** 500285	**IZM32N3-P25W-1** 500286	
	3200		1280-3200			**IZM32N3-P32F-1** 500287	**IZM32N3-P32W-1** 500288	
	4000		1600-4000			**-**	**IZM32N3-P40W-1** 500289	
100	800	IZM32	320-800	1,5 - 10	2 - 15, OFF	**IZM32H3-P08F-1** 500215	**IZM32H3-P08W-1** 500216	
	1000		400-1000			**IZM32H3-P10F-1** 500217	**IZM32H3-P10W-1** 500218	
	1200		500-1250			**IZM32H3-P12F-1** 500219	**IZM32H3-P12W-1** 500220	
	1600		640-1600			**IZM32H3-P16F-1** 500221	**IZM32H3-P16W-1** 500222	
	2000		800-2000			**IZM32H3-P20F-1** 500223	**IZM32H3-P20W-1** 500224	
	2500		1000-2500			**IZM32H3-P25F-1** 500225	**IZM32H3-P25W-1** 500226	
	3200		1280-3200			**IZM32H3-P32F-1** 500227	**IZM32H3-P32W-1** 500228	
	4000		1600-4000			**-**	**IZM32H3-P40W-1** 500229	

IZM circuit-breakers, IN switch-disconnectors

Basic devices

IZM32.. V .., 4 pole

Switching capacity	Rated operational current	Frame size	Setting range			Fixed mounted	Withdrawable units	
			Overload release	Short-circuit releases		**Part no.** Article no.	**Part no.** Article no.	Std. pack
				Delayed	Non-delayed			
$I_{cu} = I_{cs}$ kA	$I_n = I_u$ A		I_r A	$I_{sd} = I_r$ x …	$I_i = I_n$ x …			

Circuit breaker for system and selective protection

With horizontal terminals as standard. For vertical termination see page 26





4 pole								
66	800	IZM32	320-800	1.5 - 10	2 - 15, OFF	**IZM32B4-V08F-1** 500200	**IZM32B4-V08W-1** 500201	1 off
	1000		400-1000			**IZM32B4-V10F-1** 500202	**IZM32B4-V10W-1** 500203	
	1200		500-1250			**IZM32B4-V12F-1** 500204	**IZM32B4-V12W-1** 500205	
	1600		640-1600			**IZM32B4-V16F-1** 500206	**IZM32B4-V16W-1** 500207	
	2000		800-2000			**IZM32B4-V20F-1** 500208	**IZM32B4-V20W-1** 500209	
	2500		1000-2500			**IZM32B4-V25F-1** 500210	**IZM32B4-V25W-1** 500211	
	3200		1280-3200			**IZM32B4-V32F-1** 500212	**IZM32B4-V32W-1** 500213	
	4000		1600-4000			-	**IZM32B4-V40W-1** 500214	
85	800	IZM32	320-800	1.5 - 10	2 - 15, OFF	**IZM32N4-V08F-1** 500320	**IZM32N4-V08W-1** 500321	
	1000		400-1000			**IZM32N4-V10F-1** 500322	**IZM32N4-V10W-1** 500323	
	1200		500-1250			**IZM32N4-V12F-1** 500324	**IZM32N4-V12W-1** 500325	
	1600		640-1600			**IZM32N4-V16F-1** 500326	**IZM32N4-V16W-1** 500327	
	2000		800-2000			**IZM32N4-V20F-1** 500328	**IZM32N4-V20W-1** 500329	
	2500		1000-2500			**IZM32N4-V25F-1** 500330	**IZM32N4-V25W-1** 500331	
	3200		1280-3200			**IZM32N4-V32F-1** 500332	**IZM32N4-V32W-1** 500333	
	4000		1600-4000			-	**IZM32N4-V40W-1** 500334	
100	800	IZM32	320-800	1.5 - 10	2 - 15, OFF	**IZM32H3-V08F-1** 500230	**IZM32H4-V08W-1** 500261	
	1000		400-1000			**IZM32H3-V10F-1** 500232	**IZM32H4-V10W-1** 500263	
	1200		500-1250			**IZM32H3-V12F-1** 500234	**IZM32H4-V12W-1** 500265	
	1600		640-1600			**IZM32H3-V16F-1** 500236	**IZM32H4-V16W-1** 500267	
	2000		800-2000			**IZM32H3-V20F-1** 500238	**IZM32H4-V20W-1** 500269	
	2500		1000-2500			**IZM32H3-V25F-1** 500240	**IZM32H4-V25W-1** 500271	
	3200		1280-3200			**IZM32H3-V32F-1** 500242	**IZM32H4-V32W-1** 500273	
	4000		1600-4000			-	**IZM32H4-V40W-1** 500274	

Circuit breaker with power and energy metering
Only one voltage transformer PTM for 1-16 breakers required. With horizontal terminals as standard. For vertical termination see page 26

4 pole								
66	800	IZM32	320-800	1,5 - 10	2 - 15, OFF	**IZM32B4-P08F-1** 500185	**IZM32B4-P08W-1** 500186	1 off
	1000		400-1000			**IZM32B4-P10F-1** 500187	**IZM32B4-P10W-1** 500188	
	1200		500-1250			**IZM32B4-P12F-1** 500189	**IZM32B4-P12W-1** 500190	
	1600		640-1600			**IZM32B4-P16F-1** 500191	**IZM32B4-P16W-1** 500192	
	2000		800-2000			**IZM32B4-P20F-1** 500193	**IZM32B4-P20W-1** 500194	
	2500		1000-2500			**IZM32B4-P25F-1** 500195	**IZM32B4-P25W-1** 500196	
	3200		1280-3200			**IZM32B4-P32F-1** 500197	**IZM32B4-P32W-1** 500198	
	4000		1600-4000			**-**	**IZM32B4-P40W-1** 500199	
85	800	IZM32	320-800	1,5 - 10	2 - 15, OFF	**IZM32N4-P08F-1** 500305	**IZM32N4-P08W-1** 500306	
	1000		400-1000			**IZM32N4-P10F-1** 500307	**IZM32N4-P10W-1** 500308	
	1200		500-1250			**IZM32N4-P12F-1** 500309	**IZM32N4-P12W-1** 500310	
	1600		640-1600			**IZM32N4-P16F-1** 500311	**IZM32N4-P16W-1** 500312	
	2000		800-2000			**IZM32N4-P20F-1** 500313	**IZM32N4-P20W-1** 500314	
	2500		1000-2500			**IZM32N4-P25F-1** 500315	**IZM32N4-P25W-1** 500316	
	3200		1280-3200			**IZM32N4-P32F-1** 500317	**IZM32N4-P32W-1** 500318	
	4000		1600-4000			**-**	**IZM32N4-P40W-1** 500319	
100	800	IZM32	320-800	1,5 - 10	2 - 15, OFF	**IZM32H4-P08F-1** 500245	**IZM32H4-P08W-1** 500246	
	1000		400-1000			**IZM32H4-P10F-1** 500247	**IZM32H4-P10W-1** 500248	
	1200		500-1250			**IZM32H4-P12F-1** 500249	**IZM32H4-P12W-1** 500250	
	1600		640-1600			**IZM32H4-P16F-1** 500251	**IZM32H4-P16W-1** 500252	
	2000		800-2000			**IZM32H4-P20F-1** 500253	**IZM32H4-P20W-1** 500254	
	2500		1000-2500			**IZM32H4-P25F-1** 500255	**IZM32H4-P25W-1** 500256	
	3200		1280-3200			**IZM32H4-P32F-1** 500257	**IZM32H4-P32W-1** 500258	
	4000		1600-4000			**-**	**IZM32H4-P40W-1** 500259	

Rated short-circuit making capacity	Rated operational current	Frame size	Rated short-time withstand current	**Fixed mounted**	**Withdrawable units**	
			t = 1 s	**Part no.** Article no.	**Part no.** Article no.	Std. pack
I_{cm}	$I_n = I_u$		I_{cw}			
kA	A		kA			

Switch disconnectors IN32
With horizontal terminals as standard. For vertical termination see page 26

3 pole						
145	800	IN32	66	**IN32B3-08F-1** 500095	**IN32B3-08W-1** 500096	1 off
	1000			**IN32B3-10F-1** 500097	**IN32B3-10W-1** 500098	
	1200			**IN32B3-12F-1** 500099	**IN32B3-12W-1** 500100	
	1600			**IN32B3-16F-1** 500101	**IN32B3-16W-1** 500102	
	2000			**IN32B3-20F-1** 500103	**IN32B3-20W-1** 500104	
	2500			**IN32B3-25F-1** 500105	**IN32B3-25W-1** 500106	
	3200			**IN32B3-32F-1** 500107	**IN32B3-32W-1** 500108	
	4000			-	**IN32B3-40W-1** 500109	
187	800	IN32	85	**IN32N3-08F-1** 500125	**IN32N3-08W-1** 500126	
	1000			**IN32N3-10F-1** 500127	**IN32N3-10W-1** 500128	
	1200			**IN32N3-12F-1** 500129	**IN32N3-12W-1** 500130	
	1600			**IN32N3-16F-1** 500131	**IN32N3-16W-1** 500132	
	2000			**IN32N3-20F-1** 500133	**IN32N3-20W-1** 500134	
	2500			**IN32N3-25F-1** 500135	**IN32N3-25W-1** 500136	
	3200			**IN32N3-32F-1** 500137	**IN32N3-32W-1** 500138	
	4000			-	**IN32N3-40W-1** 500139	

Switch disconnectors IN32

With horizontal terminals as standard. For vertical termination see page 26

4 pole						
145	800	IN32	66	**IN32B4-08F-1** 500110	**IN32B4-08W-1** 500111	1 off
	1000			**IN32B4-10F-1** 500112	**IN32B4-10W-1** 500113	
	1200			**IN32B4-12F-1** 500114	**IN32B4-12W-1** 500115	
	1600			**IN32B4-16F-1** 500116	**IN32B4-16W-1** 500117	
	2000			**IN32B4-20F-1** 500118	**IN32B4-20W-1** 500119	
	2500			**IN32B4-25F-1** 500120	**IN32B4-25W-1** 500121	
	3200			**IN32B4-32F-1** 500122	**IN32B4-32W-1** 500123	
	4000			-	**IN32B4-40W-1** 500124	
187	800	IN32	85	**IN32N4-08F-1** 500140	**IN32N4-08W-1** 500141	
	1000			**IN32N4-10F-1** 500142	**IN32N4-10W-1** 500143	
	1200			**IN32N4-12F-1** 500144	**IN32N4-12W-1** 500145	
	1600			**IN32N4-16F-1** 500146	**IN32N4-16W-1** 500147	
	2000			**IN32N4-20F-1** 500148	**IN32N4-20W-1** 500149	
	2500			**IN32N4-25F-1** 500150	**IN32N4-25W-1** 500151	
	3200			**IN32N4-32F-1** 500152	**IN32N4-32W-1** 500153	
	4000			-	**IN32N4-40W-1** 500154	

IZM circuit-breakers, IN switch-disconnectors

Electronic releases

IZM-PXRV..., IZM-PXRP...

	Type	For use with	Ground Fault Protection[1] (T)	Arcflash Reduction Maintenance System™ (A)	Onboard ModBUS Communication (M)	**Part no.** Article no.	Std. pack
Additional function for circuit breaker with V trip unit (with LSI protection function, current metering and zone selective protection function ZSI)							
Ground Fault Protection is programable and can be set to alarm or protection ZSI included.							
	Add ground-fault protection	IZM32...-V...	●	–	–	**+IZMX-PXRV-T-1** 183926	1
	Add ARMS*	IZM32...-V...	–	●	–	**+IZMX-PXRV-A-1** 184948	1
	Add onboard Modbus	IZM32...-V...	–	–	●	**+IZMX-PXRV-M-1** 183930	1
	Add ground-fault protection and ARMS*	IZM32...-V...	●	●	–	**+IZMX-PXRV-TA-1** 183932	1
	Add ground-fault protection and onboard Modbus	IZM32...-V...	●	–	●	**+IZMX-PXRV-TM-1** 183931	1
	Add ARMS* and onboard Modbus	IZM32...-V...	–	●	●	**+IZMX-PXRV-AM-1** 184949	1
	Add ground-fault protection and ARMS* and onboard Modbus	IZM32...-V...	●	●	●	**+IZMX-PXRV-TAM-1** 183933	1
Additional function for circuit breaker with P trip unit (with LSI protection function, power metering[2], zone selective protection function and onboard Modbus)							
	Add ground-fault protection	IZM32...-P...	●	–	●	**+IZMX-PXRP-T-1** 183927	1
	Add ARMS*	IZM32...-P...	–	●	●	**+IZMX-PXRP-A-1** 183928	1
	Add ground-fault protection and ARMS*	IZM32...-P...	●	●	●	**+IZMX-PXRP-TA-1** 183929	1
Spare trip unit type V (with LSI protection function, zone selective protection function and onboard Modbus)							
	–	IZM32...-V...	–	–	–	**IZMX-PXRV-1** 183935	1
	Ground-fault protection	IZM32...-V...	●	–	–	**IZMX-PXRV-T-1** 183982	1
	ARMS*	IZM32...-V...	–	●	–	**IZMX-PXRV-A-1** 184950	1
	Onboard Modbus	IZM32...-V...	–	–	●	**IZMX-PXRV-M-1** 183986	1
	Ground-fault protection and ARMS*	IZM32...-V...	●	●	–	**IZMX-PXRV-TA-1** 183988	1
	Ground-fault protection and onboard Modbus	IZM32...-V...	●	–	●	**IZMX-PXRV-TM-1** 183987	
	ARMS* and onboard Modbus	IZM32...-V...	–	●	●	**IZMX-PXRV-AM-1** 184951	1
	Ground-fault protection and ARMS* and onboard Modbus	IZM32...-V...	●	●	●	**IZMX-PXRV-TAM-1** 183989	1
Spare trip unit type P (with LSI protection function, power metering[2], zone selective protection function and onboard Modbus)							
	–	IZM32...-P...	–	–	●	**IZMX-PXRP-1** 183936	1
	Ground-fault protection	IZM32...-P...	●	–	●	**IZMX-PXRP-T-1** 183983	1
	ARMS *	IZM32...-P...	–	●	●	**IZMX-PXRP-A-1** 183984	1
	Ground-fault protection and ARMS*	IZM32...-P...	●	●	●	**IZMX-PXRP-TA-1** 183985	1

Notes

[1] 3pole breaker need an external wired N-conductor current transformer.

[2] Power metering requires one external voltage transformer module ...PTM for 1-16 trip units.

General: Articles without „+" are complete field kits for spare/upgrading purposes.
Articles with „+" add further factory installed function into the configuration.

[3] * Because of limited space here we are using the short form ARMS, but it always means Arcfault Reduction Maintenance System™

	Description	For use with	**Part no.** Article no.	Std. Pack
Voltage transformer				
	Externally mounted voltage transformer to provide voltage sensing input to 1-16 P-Type trip units. Maximum distance = 75m.	IZM32..-1	**IZMX-PXR-PTM-1** 184142	1
Power supply				
	Optional for the trip unit in case of breaker is not in operation and - display information is requested or - test simulation with trip	IZM32..-1	**IZMX-DT-PS-1** 183969	1
Current sensor for neutral conductor on 3-pole circuit breakers with earth-/ground fault protection				
	Externally mounted neutral sensor for residual ground.	IZM32..-1	**IZMX-CT40-N-1** 183991	
Communication adapter modules External modules are equipped with wire harness.				
	Profibus		**IZMX-PCAM-1** 186875	1
	Ethernet		**IZMX-ECAM-1** 186874	
	Modbus		**IZMX-MCAM-1** 186876	
	Spare wire harness		**IZMX-CAM-CAB-1** 186877	

IZM circuit-breakers, IN switch-disconnectors

Withdrawable units & Accessories for IZM32/IN32

IZM-CAS..., 3/4 pole



	Rated operational current	For use with	Part no. Article no.	Part no. Article no.	
	I_n A		**3 Pole**	**4 Pole**	Std. pack
Cassettes (in combination with ordered breaker)					
Following components are fitted to the cassette as standard: • Arc chute cover • Complete set of control circuit terminals • Coding between cassette and switch • Horizontal Connection • Door seal	≤ 2000	IZM32..W-1	**+IZM-CAS323-2000-1** 500087	**+IZM-CAS324-2000-1** 500089	1 off
	≤ 3200		**+IZM-CAS323-3200-1** 500088	**+IZM-CAS324-3200-1** 500090	1 off
	4000		**+IZM-CAS-E403-1** 500091	**+IZM-CAS-E404-1** 500092	1 off
Separate cassettes					
	≤ 2000	IZM32..W-1	**IZM-CAS323-2000-1** 500335	**IZM-CAS324-2000-1** 500337	1 off
	≤ 3200		**IZM-CAS323-3200-1** 500336	**IZM-CAS324-3200-1** 500338	1 off
	4000		**IZM-CAS-E403-1** 500339	**IZM-CAS-E404-1** 500340	1 off
Cassette safety shutters					
When the breaker is withdrawn from its connected position, the shutters automatically cover the cassette's live main terminals. With 2.5 mm holes for voltage test. IP20					
		IZM-CAS..-1	**+IZM-SH323-1** 500093	**+IZM-SH324-1** 500093	1 off
			**IZM-SH323-1** 500341	**IZM-SH324-1** 500342	1 off
Spare secondary 4point terminal block kit for fixed breakers					
	Control circuit terminals, 2 units		**IZMX-SEC-TB2-F-1** 184239		1
	Control circuit terminals, 12 units		**IZMX-SEC-TB12-F-1** 184240		1
Spare secondary 4point terminal block kit for withdrawable breakers					
	Control circuit terminals, 2 units		**IZMX-SEC-TB2-W-1** 184242		1
	Control circuit terminals, 12 units		**IZMX-SEC-TB12-W-1** 184243		1
Secondary terminals upgrade kit					
Replacement kit for old cassettes with Digitrip. Allows updating the cassette in order to receive new breaker with PXR „-1" ending.		IZM-CAS...old	**IZM-SEC-KIT-W323-1** 500376	**IZM-SEC-KIT-W324-1** 500377	1

		For use with	**Part no.** Article no.	Std. pack	**Notes**
Cell switches					
One module each with 4 changeover contacts is possible for indication of each position(Disconnect, Test, Connect). Only one mounting plate is required per withdrawable unit. Can be wired directly to external terminals only. If a shutter is used, mounting is possible on the right side only					
	Four changeover contacts: One module without mounting plate	IZM32..W-1 IN32..W-1	**IZM-CS4-1** 303704	1 off	-
	Four changeover contacts: One module with mounting plate		**IZM-CS4MB-1** 303705		
	Eight changeover contacts: Two modules with mounting plate		**IZM-CS8MB-1** 303706		
	Twelve changeover contacts: Three modules with mounting plate		**IZM-CS12MB-1** 303707		

IZM Circuit Breakers, IN Switch Disconnectors

Electrical accessories for IZM32/IN32

IZM-M.., IZM-OC..

		For use with	Part no. Article no.	Price See price list	Std. pack	Notes
Motor operator The motor operator electrically tensions the spring-operated stored energy mechanism. For electrical remote On and Off switching, a closing release and a voltage release are required. A signaling switch labeled "Spring-operated stored energy mechanism tensioned" is included as standard.						
	24V DC	IZM32..-1 IN32..-1	**IZM-M24DC-1** 303745		1 off	If ordered separately the secondary terminals are not necessary to be ordered.
			+IZM-M24DC-1 303744			
	48V DC		**IZM-M48DC-1** 303752			
			+IZM-M48DC-1 303746			
	60V DC		**IZM-M60DC-1** 303756			
			+IZM-M60DC-1 303754			
	110V - 125V DC		**IZM-M110DC-1** 303767			
			+IZM-M110DC-1 303753			
	220V - 250V DC		**IZM-M220DC-1** 303769			
			+IZM-M220DC-1 303768			
	110V - 127V AC		**IZM-M110AC-1** 303771			
			+IZM-M110AC-1 303770			
	208V - 240V AC		**IZM-M230AC-1** 303776			
			+IZM-M230AC-1 303774			
Switching cycle counter Counts the number of On-Off operations. Can also be used without motor operator.						
		IZM32..-1 IN32..-1	**IZM-OC-1** 303850		1 off	
			+IZM-OC-1 303849			

	Rated control voltage U_s V	For use with	**Part no.** Article no.	Std. pack	**Notes**
Shunt releases 100% Duty For remote OPEN or interlocking in OPEN. Can be combined with an undervoltage release or with a second shunt release.					
	24 DC	IZM32..-1 IN32..-1	**IZM-ST24DC-1** 303780	1 off	If ordered separately the secondary terminals are not necessary to be ordered.
	24 DC		**+IZM-ST24DC-1** 303778		
	48 DC		**IZM-ST48DC-1** 303784		
	48 DC		**+IZM-ST48DC-1** 303782		
	60 DC		**IZM-ST60DC-1** 303787		
	60 DC		**+IZM-ST60DC-1** 303786		
	110 - 125 DC 110 - 127 AC		**IZM-ST110AD-1** 303789		
	110 - 125 DC 110 - 127 AC		**+IZM-ST110AD-1** 303788		
	220 - 250 DC 208 - 240 AC		**IZM-ST230AD-1** 303791		
	220 - 250 DC 208 - 240 AC		**+IZM-ST230AD-1** 303790		
Second shunt release					
	24 DC	IZM32..-1 IN32..-1	**+IZM-STS24DC-1** 303792	1 off	If ordered separately the secondary terminals are not necessary to be ordered.
	48 DC		**+IZM-STS48DC-1** 303793		
	60 DC		**+IZM-STS60DC-1** 303794		
	110 - 127 DC 110 - 127 AC		**+IZM-STS110AD-1** 303795		
	208 - 250 DC 208 - 250 AC		**+IZM-STS230AD-1** 303796		

IZM-SR..

	Rated control voltage U_s V	For use with	**Part no.** Article no.	Std. pack	**Notes**
Closing releases 100% Duty For remote CLOSE Can be combined with a shunt release and an undervoltage release or with a second shunt release. Can be combined with two undervoltage release.					
	24 DC	IZM32..-1 IN32..-1	**IZM-SR24DC-1** 303798	1 off	If ordered separately the secondary terminals are not necessary to be ordered.
	24 DC		**+IZM-SR24DC-1** 303797		
	48 DC		**IZM-SR48DC-1** 303800		
	48 DC		**+IZM-SR48DC-1** 303799		
	60 VDC		**IZM-SR60DC-1** 303804		
	60 VDC		**+IZM-SR60DC-1** 303801		
	110 - 125 DC 110 - 127 AC		**IZM-SR110AD-1** 303807		
	110 - 125 DC 110 - 127 AC		**+IZM-SR110AD-1** 303806		
	220 - 250 DC 208 - 240 AC		**IZM-SR230AD-1** 303809		
	220 - 250 DC 208 - 240 AC		**+IZM-SR230AD-1** 303808		

		Rated control voltage U_s V	For use with	**Part no.** Article no.	Std. pack	**Notes**
Undervoltage releases 100% duty For remote OPEN or interlocking in OPEN Two can be used or one with shunt release (ST).						
		24 DC	IZM32..-1 IN32..-1	**IZM-UVR24DC-1** 303815	1 off	If ordered separately the secondary terminals are not necessary to be ordered.
		24 DC		**+IZM-UVR24DC-1** 303814		
		32 DC		**IZM-UVR32DC-1** 303817		
		32 DC		**+IZM-UVR32DC-1** 303816		
		48 DC		**IZM-UVR48DC-1** 303819		
		48 DC		**+IZM-UVR48DC-1** 303818		
		60 DC		**IZM-UVR60DC-1** 303821		
		60 DC		**+IZM-UVR60DC-1** 303820		
		110 - 125 DC		**IZM-UVR110DC-1** 303823		
		110 - 125 DC		**+IZM-UVR110DC-1** 303822		
		220 - 250 DC		**IZM-UVR220DC-1** 303825		
		220 - 250 DC		**+IZM-UVR220DC-1** 303824		
		110 - 127 AC		**IZM-UVR110AC-1** 303827		
		110 - 127 AC		**+IZM-UVR110AC-1** 303826		
		208 - 240 AC		**IZM-UVR230AC-1** 303831		
		208 - 240 AC		**+IZM-UVR230AC-1** 303830		
		380 - 415 AC		**IZM-UVR400AC-1** 303833		
		380 - 415 AC		**+IZM-UVR400AC-1** 303832		
Time delay modules For combination with an undervoltage release. Delay times: 0.1 s, 0.5 s, 1.0 s, 2.0 s						
	Only in combination with IZM-UVR110AC-1	120 AC	IZM32..-1 IN32..-1	**IZM-UVR-TD-120AC-1** 122956	1 off	
	Only in combination with IZM-UVR230AC-1	230 AC		**IZM-UVR-TD-230AC-1** 122957	1 off	

IZM circuit-breakers, IN switch-disconnectors

Accessories for IZM32/IN32

IZM-AS.., IZM-LCS.., IZM-OTS.., IZM-RA..

		For use with	**Part no.** Article no.	Std. pack	**Notes**
Auxiliary contacts					
Standard auxiliary switch for On-Off signaling 4 CO contacts are already contained in the basic device. Maximum, for IZM32: 12 CO contacts (corresponds with an additional AS44).					
	Additionally 4 CO contacts	IZM32..-1 IN32..-1	**IZM-AS22-1** 303836	1 off	Cannot be combined with a second shunt release;
	Additionally 4 CO contacts		**+IZM-AS22-1** 303834		If ordered separately the secondary terminals are not necessary to be ordered.
	Additionally 8 CO contacts		**+IZM-AS44-1** 303835		
Latch check switch Latch check switch with one changeover contact.					
	-	IZM32..-1 IN32..-1	**IZM-LCS-SR-1** 303813	1 off	For internal wiring with closing release
			+IZM-LCS-SR-1 303812		
			IZM-LCS-1 303811		For external wiring with keypad indication
			+IZM-LCS-1 303810		
Trip indication and reset options					
Trip-indicating auxiliary switch (OTS) Two changeover contacts					
	-	IZM32..-1	**IZM-OTS-1** 303839	1 off	If ordered separately the secondary terminals are not necessary to be ordered.
			+IZM-OTS-1 303838		
Automatic reset The circuit-breaker is immediately ready to close again. Not fitted with mechanical trip indicator (red pin). Can not be combined with remote reset.					
	-	IZM32..-1	**IZM-RA-1** 303841	1 off	-
			+IZM-RA-1 303840		

	Rated control voltage U_S V	For use with	**Part no.** Article no.	Std. pack	**Notes**
Trip indicator remote reset					
The remote reset allows resetting the trip indicator remotely by an electrical signal					
	24 V DC	IZM32..-1	**IZM-RR24DC-1** 303846	1 off	If ordered separately a secondary terminal block IZM-SEC… is necessary for connection. Order separately if required.
			+IZM-RR24DC-1 303842		
	208-250VAC/DC		**IZM-RR230AD-1** 303848		
			+IZM-RR230AD-1 303847		

IZM circuit-breakers, IN switch-disconnectors

Accessories for IZM32/IN32

IZM-PLPC.., IZM-KLP..

		For use with	Part no. Article no.	Std. pack
Locking facilities				
Padlockable cover of ON/OFF buttons ON-Off pushbutton cover sealable with lead seal and lockable with padlock.				
	Metal, On pushbutton blocked	IZM32..-1 IN32..-1	**+IZM-PLPC-CB-M-1** 303712	1 off
	Plastic, On pushbutton blocked		**+IZM-PLPC-CB-P-1** 303711	
	Metal		**IZM-PLPC-M-1** 303720	
			+IZM-PLPC-M-1 303718	
	Metal OFF = Safe OFF; then it is also impossible to switch ON via the closing release		**+IZM-PLPC-M-OFF-1** 303726	
			IZM-PLPC-M-OFF-1 303728	
	Plastic		**IZM-PLPC-P-1** 303717	
			+IZM-PLPC-P-1 303714	
The "Safe OFF" interlock prevents switching on. Neither remote nor local switching on is possible.				
	CES installation kit, without lock cylinder and key	IZM32..-1 IN32..-1	**IZM-KLP-SO-CES-1** 303733	1 off
	Kirk installation kit, without lock cylinder and key		**IZM-KLP-SO-KIRK-1** 303739	
	Castell installation kit, without lock cylinder and key		**IZM-KLP-SO-CASTELL-1** 303731	
	Ronis installation kit, without lock cylinder and key		**IZM-KLP-SO-RONIS-1** 303741	
Cassette key locking facility This device is fitted to the cassette and prevents a switch being switched on in its operating (Connected) position.				
	Installation on right, without lock cylinder and key	IZM32..W-1 IN32..W-1	**IZM-KLP-CASS-R-1** 303709	1 off
	Installation on left, without lock cylinder and key		**IZM-KLP-CASS-L-1** 303708	1 off

Notes

Lock cylinder and key are required for installation.
Ronis lock: #1351-10B
CES lock: Cylinder #5256-LAG; Key #90134
Castell lock: Cylinder #CL1019, Modified to 90^0+ „letter"; Key #FKV4-NI, + „letter"
Kirk lock: #KC40

	Rated operational current I_n A	Rated ultimate short-circuit breaking capacity I_{cu} kA	Pole	For use with	**Part no.** Article no.	Std. pack
Main terminal kits						
Each basic device of the IZM32 /IN32 series is supplied with horizontal terminals as standard. For vertical termination the (90°) following adapter kit is required. Each set contains for top and bottom 3-pole = 6 off; 4-pole =8 off.						
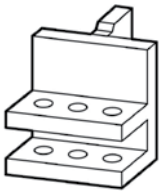	≤1600	≤65	3	IZM32B..-1 IN32B..-1	**IZM-TV323B-1600-1** 500355	1 off
	≤2000	≤100	3	IZM32N..-1, IZM32H..-1 IN32N..-1	**IZM-TV323H-2000-1** 500356	
	2500-3200	100	3	IZM32H..-1 IN32N..-1	**IZM-TV323H-3200-1** 500357	
	≤1600	≤65	4	IZM32B..-1 IN32B..-1	**IZM-TV324B-1600-1** 500358	
	≤2000	≤100	4	IZM32N..-1, IZM32H..-1 IN32N..-1	**IZM-TV324H-2000-1** 500359	
	2500-3200	100	4	IZM32H..-1 IN32N..-1	**IZM-TV324H-3200-1** 500360	
General accessories						
Spare door escutcheon, IP41 Spare part; the door escutcheon is supplied as standard with the basic unit or cassette.						
			Door escutcheon IP41	IZM32..-1 IN32..-1	**IZM-DEG-1** 303743	1 off
			Door cover IP55		**IZM-DC-1** 303742	
Lifting yoke for lifting Consists of two specially shaped steel hooks that engage in the molded lifting handles in the basic unit of the switch closure.						
			3	IZM32..-1 IN32..-1	**IZM323-8651C91G02** 124239	
			4	IZM32..-1 IN32..-1	**IZM324-8651C91G07** 124240	

IZM circuit-breakers, IN switch-disconnectors

Accessories for IZM32/IN32

IZMX-MIL…, IZMX-MIL-CAB…

		For use with	**Part no.** Article no.	Std. pack
Locking facilities				
Mechanical interlock, **fixed** units. **Select one kit (article) per frame/breaker**				
	Type 2, for 2 circuit-breakers: A normal power supply (A) and an emergency mains supply (B). 1 set of cables also required. Type 31, for 3 circuit-breakers: Two normal power supplies (A, C) and an emergency network supply (B). When B in Off, A and C can be switched on. B can be switched on only when A and C are in Off. Two sets of cables required in addition. Type 33, for 3 circuit-breakers: Three power supplies (A, B, C), normal or emergency network. Only one of the three circuitbreakers can be switched on at any one time. Three sets of cables are required in addition.	IZM32..F-1 IN32..F-1	**IZMX-MIL23133C-F63-1** 184402	1 off
	Type 32, for 3 circuit-breakers: Two normal power supplies (A, C) and a coupling (B). Any one or two circuit-breakers can be closed at the same time. Three sets of cables are required in addition.		**IZMX-MIL32C-F63-1** 184403	
Mechanical interlock, **withdrawable** units. **Select one kit (article) per frame/breaker**				
	Type 2, for 2 circuit-breakers: A normal power supply (A) and an emergency network supply (B). 1 set of cables also required. Type 31, for 3 circuit-breakers: Two normal power supplies (A, C) and an emergency network supply (B). When B in Off, A and C can be switched on. B can be switched on only when A and C are in Off. Two sets of cables required in addition. Type 33, for 3 circuit-breakers: Three power supplies (A, B, C), normal or emergency network. Only one of the three circuitbreakers can be switched on at any one time. Three sets of cables are required in addition.	IZM32..W-1 IN32..W-1	**IZMX-MIL23133C-W63-1** 184404	1 off
	Type 32, for 3 circuit-breakers: Two normal power supplies (A, C) and a coupling (B). Any one or two circuit-breakers can be closed at the same time. Three sets of cables are required in addition.		**IZMX-MIL32C-W63-1** 184405	
Cable sets for mechanical interlock Depending on the type of interlock, a particular number of cable connectors is required. With the flexible cable connectors, various different switch arrangements can be implemented. **One set contains two cables.**				
	1520 mm	IZM32..-1 IN32..-1	**IZMX-MIL-CAB1520-1** 184218	1 off
	1830 mm		**IZMX-MIL-CAB1830-1** 184219	
	2440 mm		**IZMX-MIL-CAB2440-1** 184220	
	3050 mm		**IZMX-MIL-CAB3050-1** 184221	

	Type of interlock	Typical circuit	Interlocks possible
Mechanical Interlock configurations			

Type 2

Across Two Circuit Breakers
One normal power supply and one emergency power supply.

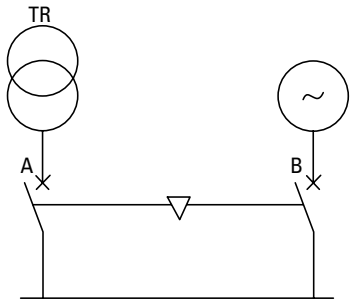

Interlock: A against B

Circuit breaker A can only be closed if B is open and vice versa.,

A = Normal power supply
B = Emergency power supply.

A	B
0	0
1	0
0	1

Type 31

Across Three Circuit Breakers
Two normal power supplies and one emergency power supply.

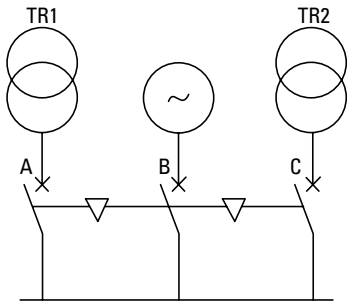

Interlock: A, C against B

Circuit breaker A and C can only be closed if B is open. B can only be closed when A and C are open.

A	B	C
0	0	0
1	0	0
0	1	0
0	0	1
1	0	1

Type 32

Across Three Circuit Breakers
The two half-bus bars can be powered by a single transformer (bustie closed) or by both at the same time (bus-tie open).

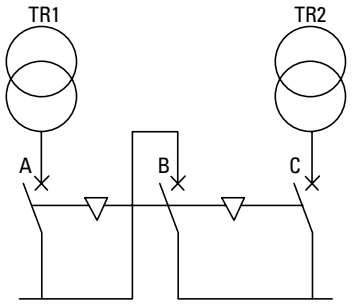

Interlock: 2 against 1 or max. 2 of 3

One of two circuit breakers out of three can be closed at the same time.

A	B	C
0	0	0
1	0	0
0	1	0
0	0	1
1	1	0
0	1	1
1	0	1

Type 33

Across Three Circuit Breakers
Three power supplies (generators or transformers) on the same bus bar, making operation in parallel impossible.

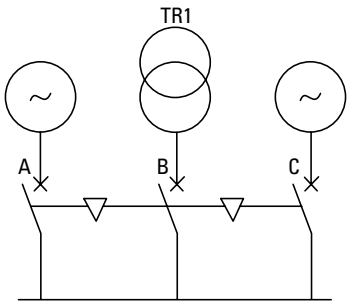

Interlock: 1 against 2 or max. 1 of 3

Only one of three circuit breakers can be closed.

A	B	C
0	0	0
1	0	0
0	1	0
0	0	1

IZM32 Control Circuit Terminal Assignment

Secondary terminal positions occupied when standard device ordered (With PXR 20/25 & 4 CO contacts)

1	3	5	7	9	11	13	15	17	19	21	23	25	27	29	31	33	35	37	39	41	43	45	47
E01+		OT1C	OT1B	OT2C	N1	ALMC	ALM2	G1	+24V	ZIN	ZCOM	CMM1	CMM3	PTVA	PTVC	MODB	MODG	2CMM	2CMM	ARCO			
E02 -	SC	OT1M	OT2B	OT2M	N2	ALM1	ALM3	G2	AGND	ARMS	ZOUT	CMM2	CMM4	PTVB	PTVN	MODB	2CMM	2CMM	ARCO	ARCO			
2	4	6	8	10	12	14	16	18	20	22	24	26	28	30	32	34	36	38	40	42	44	46	48

1, 2 Motor operator
4 Message: Spring energy store tension
5~7 Overload trip switch 1 (OTS) (5-COM, 6-N.O, 7-N.C.)
8~10 Overload trip switch 2 (OTS) /(8-N.C., 9-COM, 10-NO)
11, 12 External neutral sensor
13~16 Alarm
17, 18 Reserved
19, 20 Control voltage supply 24VDC
21, 23, 24 Zone selectivity ZSI
20, 22 Arcflash Reduction Maintenance System™
25-28 External CAM module
29~32 PT module
33~35 Onboard ModBus
36~39 External CAM module (reserved)
40~42 ARCON
3, 88, 95, 96, 43~48 - reserved

Secondary terminal positions occupied when standard device ordered (With PXR 20/25 & 4 CO contacts)

49	51	53	55	57	59	61	63	65	67	69	71	73	75	77	79	81	83	85	87	89	91	93	95
C1	B1	C2	C3	B3	C4	C5	B5	C6	C7	B7	C8	C9	B9	C10	C11	B11	C12	LCC	LCB	ST1	SR1	UV1+	
A1	B2	A2	A3	B4	A4	A5	B6	A6	A7	B8	A8	A9	B10	A10	A11	B12	A12	LCM		ST2	SR2 -	UV2 -	
50	52	54	56	58	60	62	64	66	68	70	72	74	76	78	80	82	84	86	88	90	92	94	96

49~84 Auxiliary contact (C-COM, A- NO, B-NC)
85~87 Latch check switch (85-COM, 86-NO, 87-NC)
89, 90 Shunt trip/2nd UVR
91, 92 Spring closing release
93, 94 UVR/2nd shunt trip

Terminal Assignment of Cell Switch

Disconnect

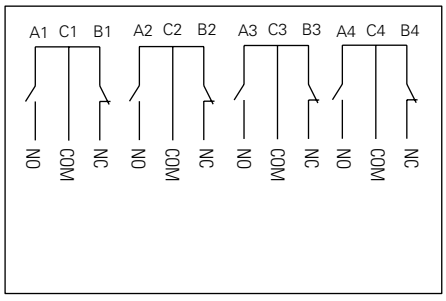

Test

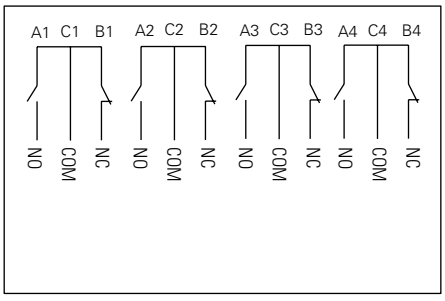

Connect

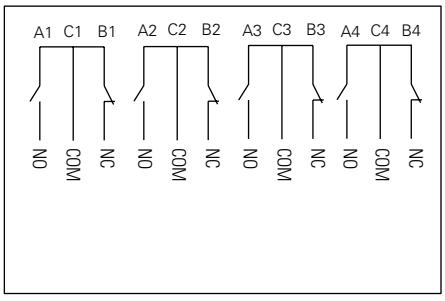

Type of Conductor	Tension Clamp Connection	Recommended Length
Solid cross section (min - max)	0.5 - 4 mm²	Strip length 10 - 12 mm (0.39 - .47 in.)
Flexible cross section (min - max)	0.5 - 4 mm²	Strip length 10 - 12 mm (0.39 - .47 in.)
American wire gauge - AWG (min - max)	20 - 12 AWG	Strip length 10 - 12 mm (0.39 - .47 in.)
Flexible cross-section with wire end ferrule without plastic sleeve - DIN 46228/1 (min - max)	0.5 - 2.5 mm² (20-14 AWG)	Ferrule length 10 - 12 mm (0.39 -.47 in.)
Flexible cross-section with wire end ferrule with plastic sleeve - DIN 46228/4 (min - max)	0.5 - 1.5 mm² (24-16 AWG)	Ferrule length 16 - 18 mm (0.63 - .71 in.)

Front View of MCAM

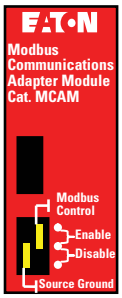

Top View of a mounted MCAM on external din rail

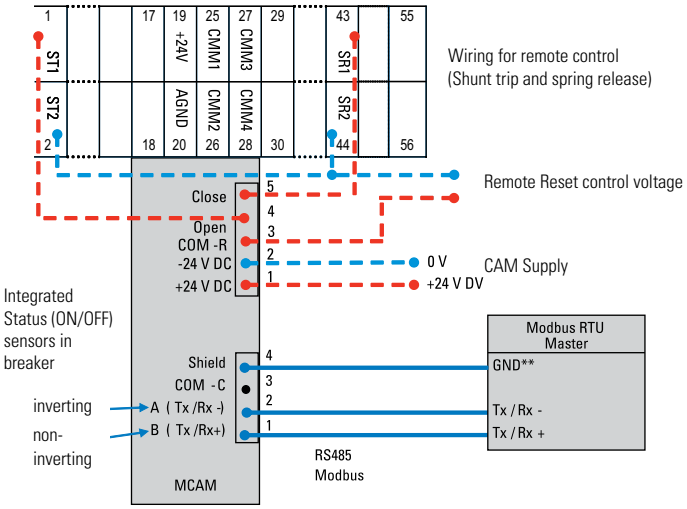

Front View of PCAM

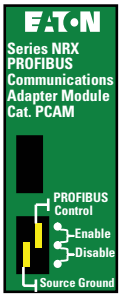

Top View of a mounted PCAM on external din rail

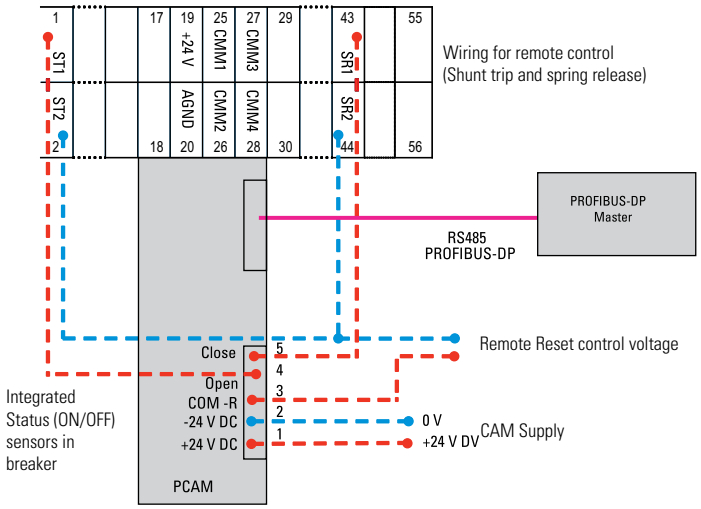

Front View of ECAM

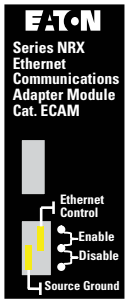

Top View of a mounted ECAM on external din rail

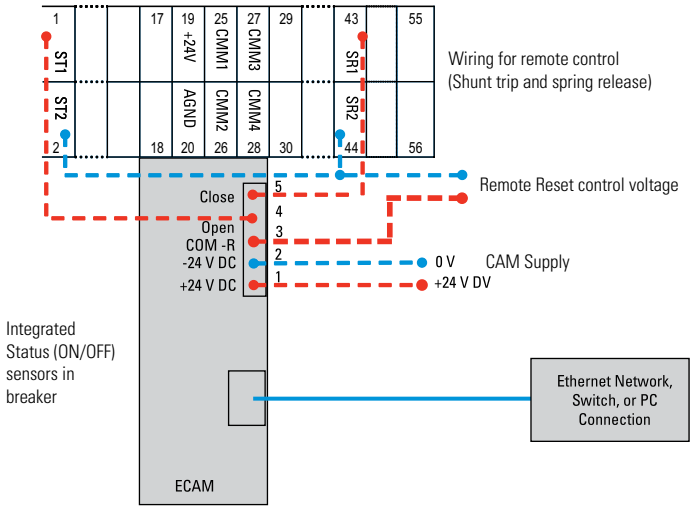

IZM32...V(P)...PXR20/25 Long Delay(L) and Short Delay(S) Curves
L-Protection: I²t-Characteristic curve and S-Protection: Flat characteristic curve

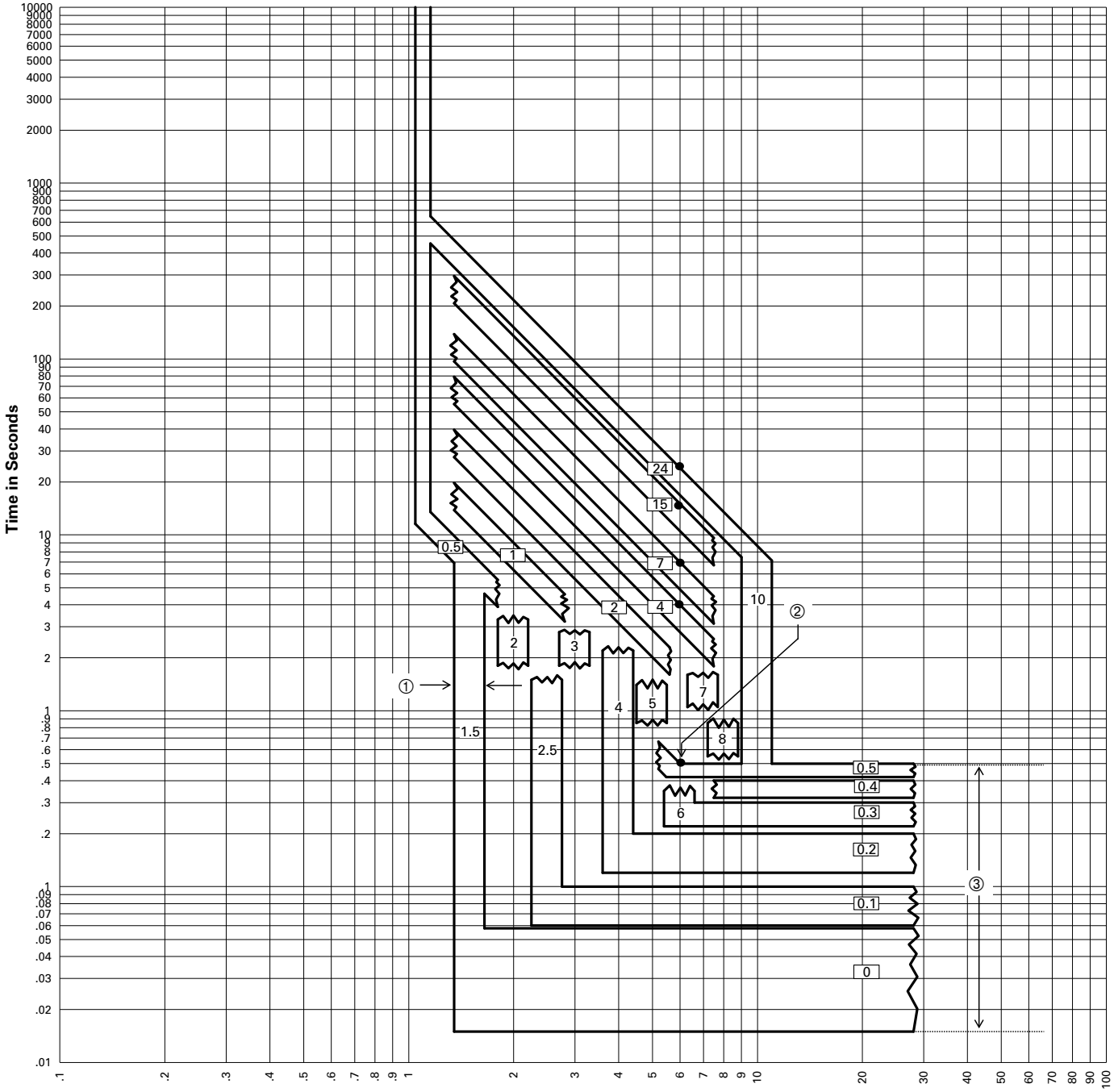

Notes:

1. Short slope: Flat, the actual pickup point has 100% ±10% tolerance.
2. Long delay I²T slopes flattens out at 6x of I_r.
3. Short time delay from 0(50ms) to 0.5s, with +0 / -80ms tolerance except 0.1s and 0s setting
   0.1s setting, trip time is 0.06s to 0.1s
   0s settting, nominal clear time is 60ms with auxiliary power and 120ms without.
4. If long delay thermal memory is enabled, trip times may be shorter than indicated in this chart.
5. Curves applies from -20°C to +70°C ambient. Temperatures above +85°C will cause over temperature trip.
6. This curve is for 50Hz, 60Hz applications.
7. These curves are comprehensive for series IZM circuit breakers including all frame sizes, ratings, and constructions.
   The total clearing times shown include the response time for trip unit, the breaker opening and the interruption of the current

IZM32...V(P)...PXR20/25 Long Delay(L) and Short Delay(S) Curves
S-Protection with: I²t-Characteristic curve ON

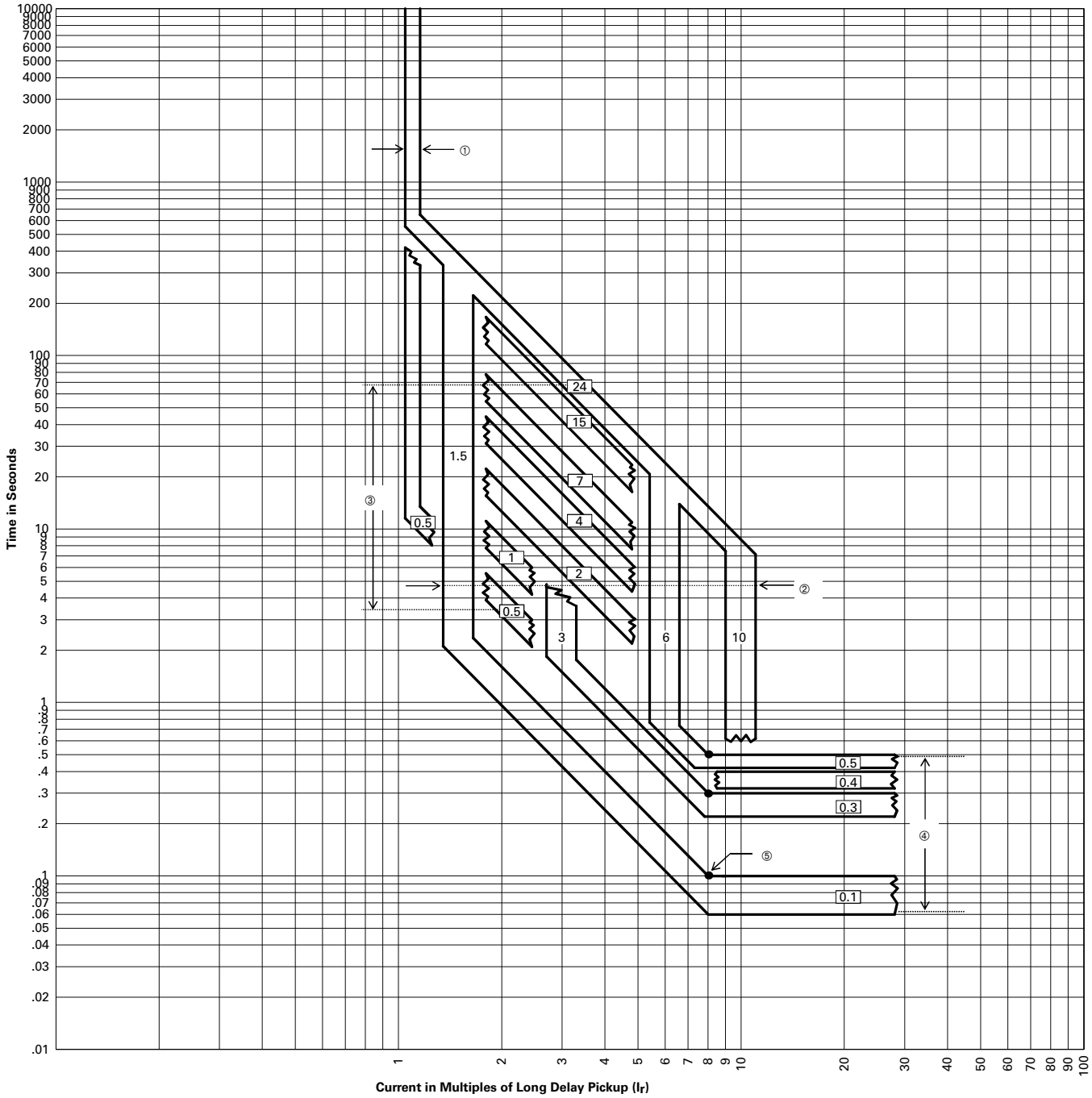

Notes:

1. This curve shown as a multiple of the LONG PU setting(I_r). The actual pickup point occurs at 110% of the I_r, with ±5% tolerance.
2. SDPU = 1.5x to 10x of I_r, have 100% ± 10% tolerance.
3. LD Time = 0.5s to 24s, have 100% +0 / -30% tolerance.
4. SD Slope = I²T. The short pickup points have ±10% tolerance.
   time setting from 0.1s to 0.5s, with steps of 0.1s, except 0.2s.
   tolerance is 100% +0 / -30% except 0. 1s, has tolerance 100% +0 / -40%.
5. I²T slopes flattens out at 8x of I_r for top of band with FLAT time minimum value prevailing for bottom of band. For all curves the lower flat response time value projected to I²T line will determine the other break point and shape of the curve.
6. If long delay thermal memory is enabled, trip times may be shorter than indicated in this chart.
7. Curves applies from -20°C to +70°C ambient. Temperatures above +85°C will cause over temperature trip.
8. This curve is for 50Hz, 60Hz applications.
9. These curves are comprehensive for series IZM circuit breakers including all frame sizes, ratings, and constructions.

IZM32...V(P)...PXR20/25 Instantaneous(I) Curves
I-Protection: Adjustable

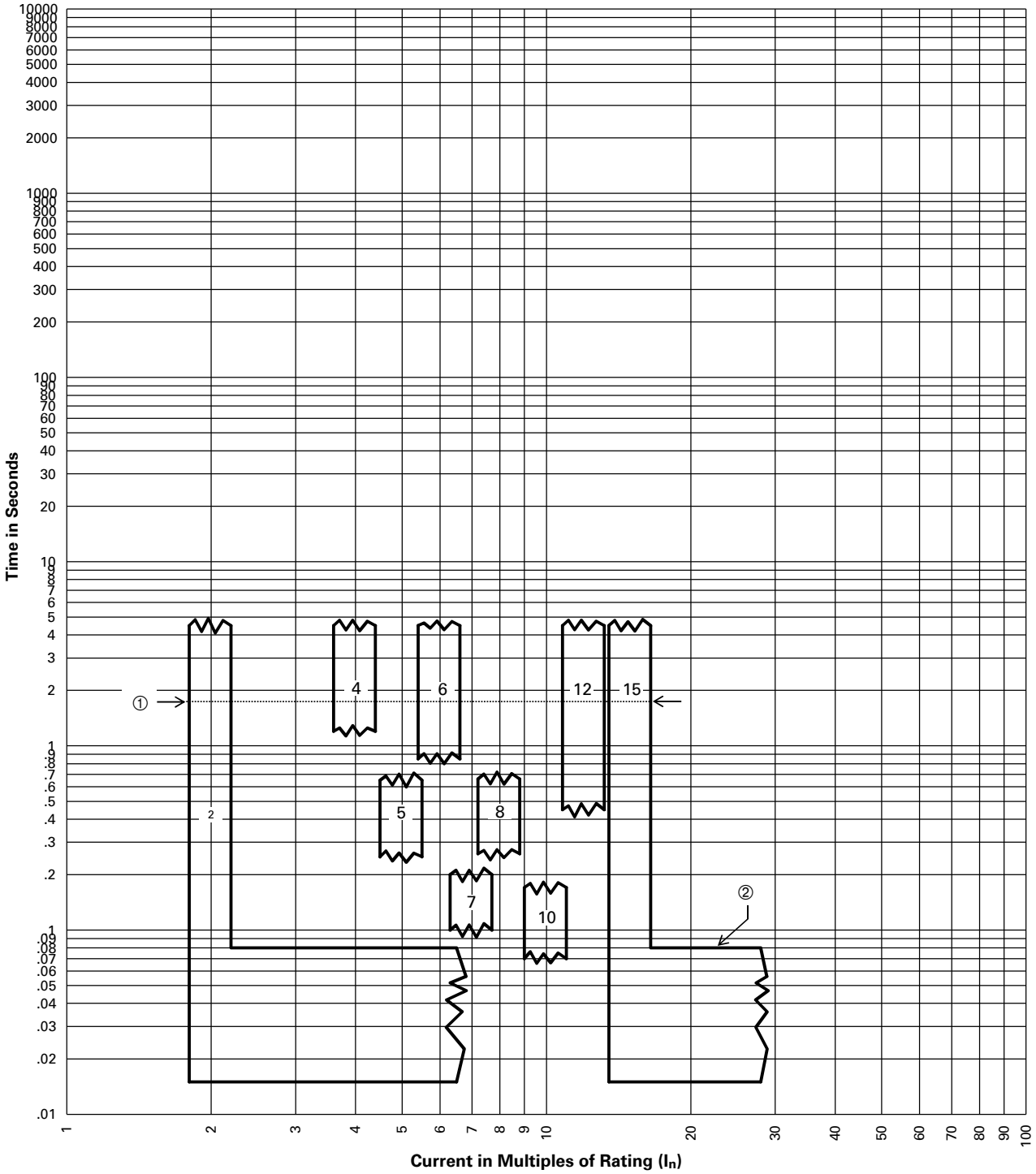

Notes:

1. The Instantaneous settings have conventional 100% ±10% as the pickup points.
2. The nominal Instantaneous trip time is 60ms with auxiliary power supply and 100ms without.
3. Instantaneous protection could be disabled by setting Instantaneous PU switch to OFF position.
4. The curve is shown as a multiple of the Current Rating (I_n).
5. The end of the curve is determined by the interrupting rating of the circuit breaker.
6. Curves applies from -20°C to +70°C ambient. Temperatures above +85°C will cause over temperature trip.
7. This curve is for 50Hz, 60Hz applications.
8. These curves are comprehensive for series IZM circuit breakers including all frame sizes, ratings, and constructions.
   The total clearing times shown include the response time for trip unit, the breaker opening and the interruption of the current.

IZM32...V(P)...PXR20/25 Instantaneous(I) Curves
Instantaneous Trip at High Fault Currents

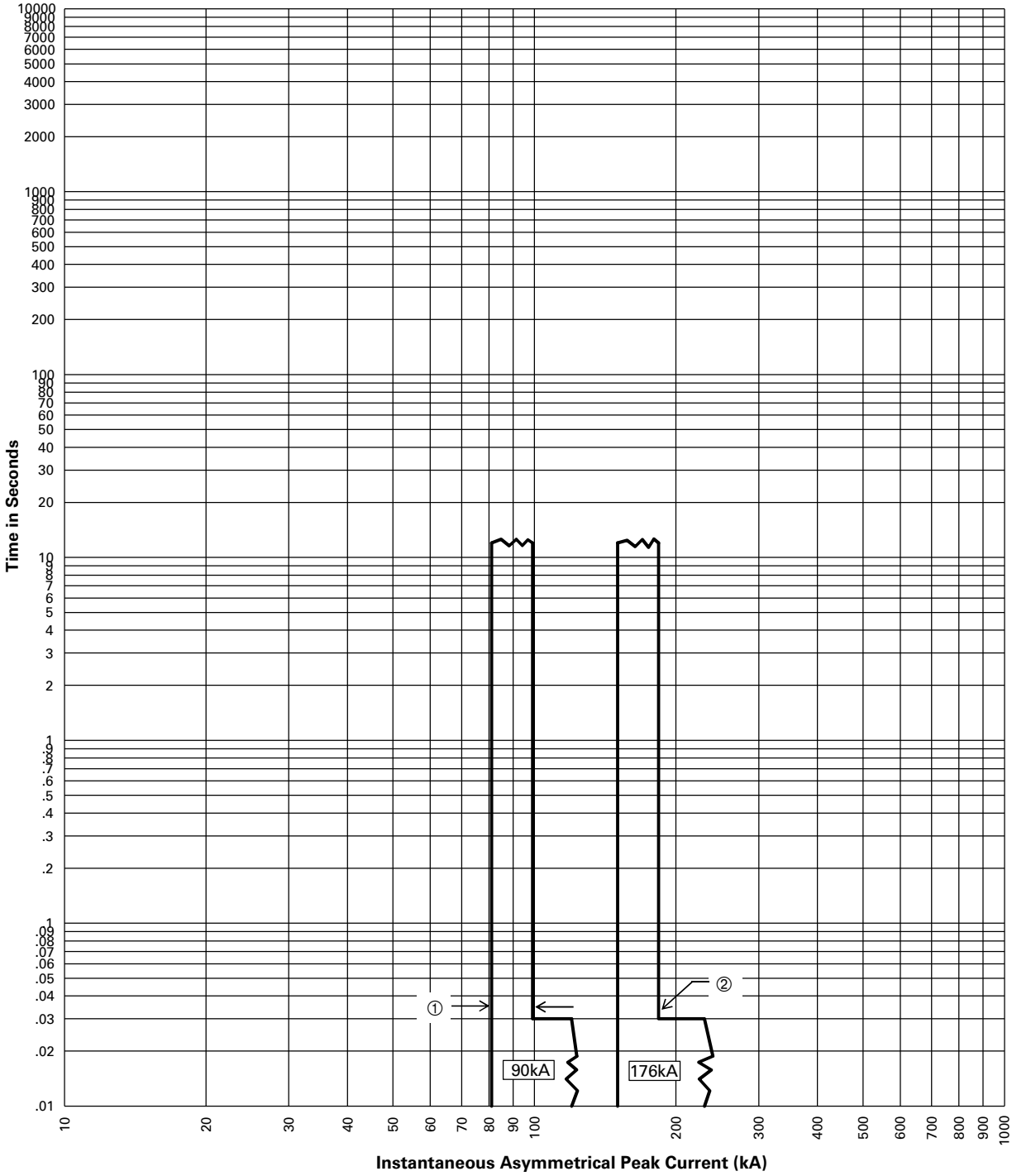

Notes:

1. Fixed High Instantaneous Trip function is provided in the circuit breaker for Series IZM32 set to pickup at 90kA. Instantaneous peak current level. The tolerance is 100% ±10% as the pickup points.
2. The peak current level setting for IZM63 is fixed at 176kA.
3. This protection is functional even when the Instantaneous is set to the OFF position.
4. The PXR will light the Instantaneous LED for a High Instantaneous trip.
5. The total Instantaneous clearing times shown are conservative and consider the maximum response times of the trip unit, the circuit breaker opening, and the interruption of the current under factors that contribute to worst case conditions, like: maximum rated voltages, single phase interruption, and minimum power factor. Faster clearing times are possible depending on the specific system conditions, the type of circuit breaker applied, and if any arc reduction settings are employed.

IZM32...V(P)...PXR20/25 Ground(G) Curves
G: Ground fault protection - Flat characteristic curve

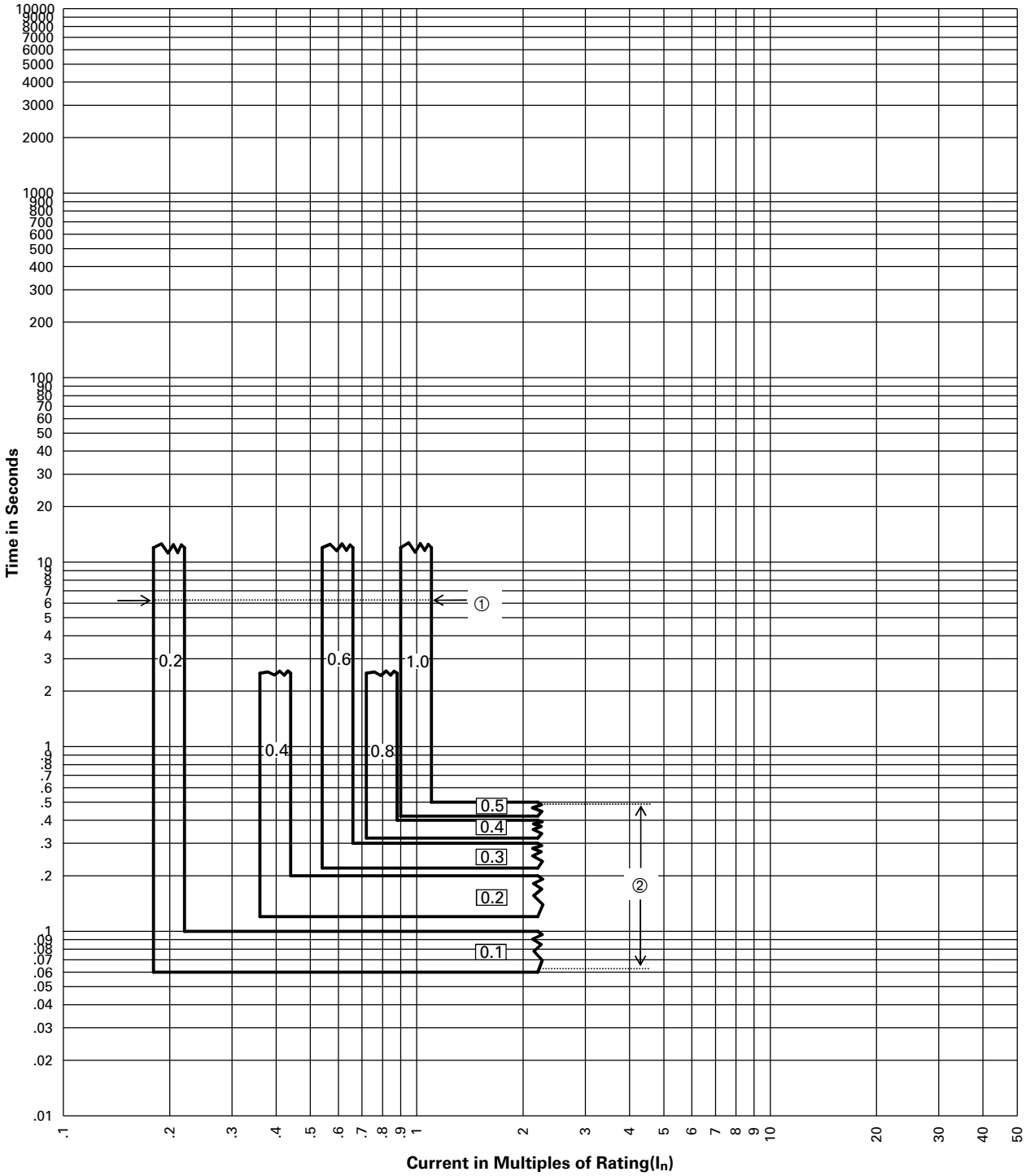

Notes:

1. Ground PU setting from 0.2 to 1.0 of I_n with steps of 0.2 , have tolerance of 100% ± 10%.
2. Ground Flat time from 0.1s to 0.5s, with 0.1s increments.
3. Ground slope: Flat, trip time tolerance is +0 / -80ms for all settings except 0.1s setting is 0.06s to 0.1s.
4. The curve is shown as a multiple of the Current Rating (I_n).
5. The end of the curve is determined by the interrupting rating of the circuit breaker.
6. Curves applies from -20°C to +70°C ambient. Temperatures above +85°C will cause over temperature trip.
7. This curve is for 50Hz, 60Hz applications.
8. These curves are comprehensive for series IZM breakers including all frame sizes, ratings, and constructions.
   The total clearing times shown include the response time for trip unit, the breaker opening and the interruption of the current.

IZM32...V(P)...PXR20/25 Ground(G) Curves
G: Ground fault protection-I²t-Characteristic curve ON

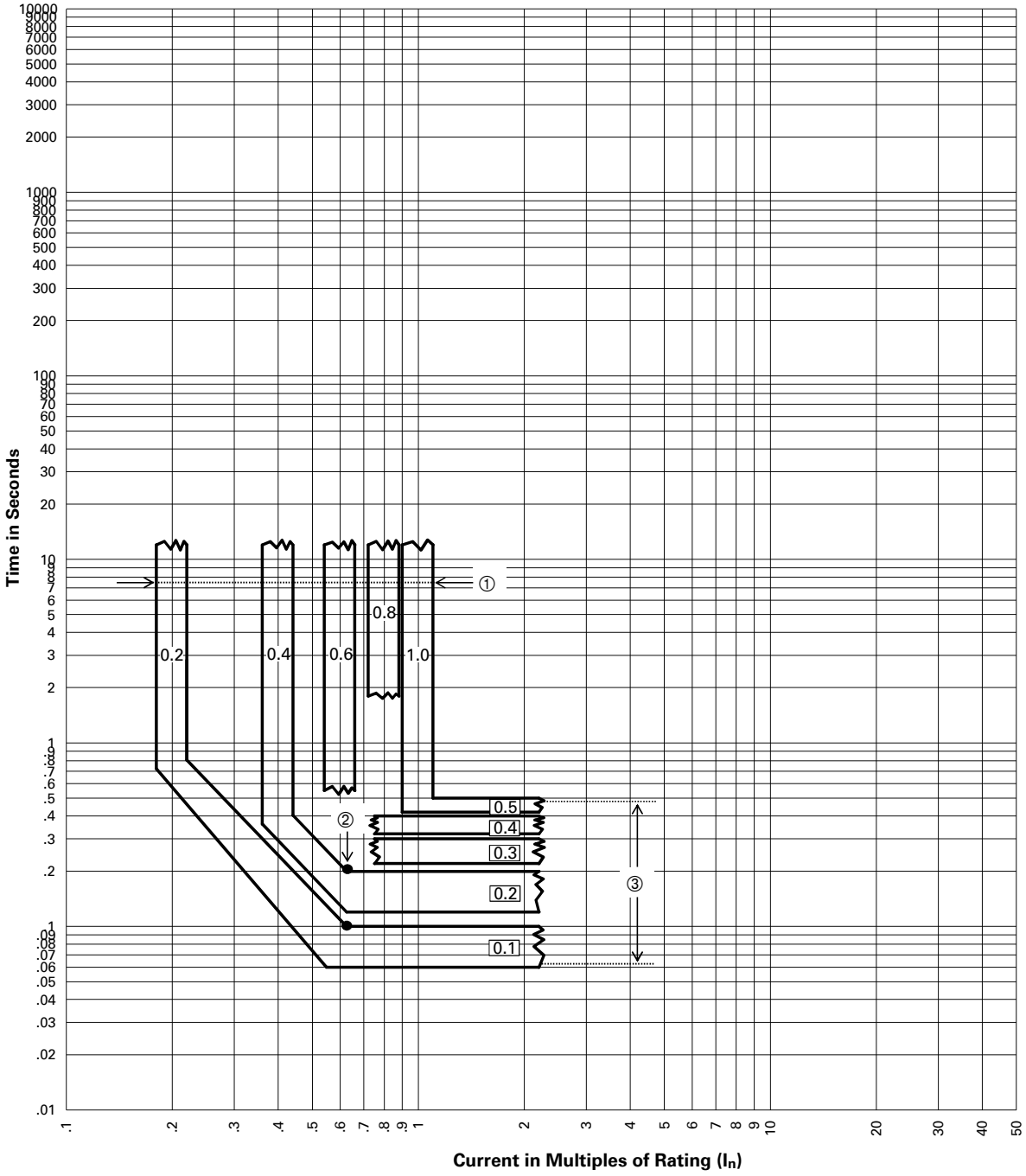

Notes:

1. Ground PU setting from 0.2 to 1.0 of I_n with steps of 0.2 , have tolerance of 100%± 10%.
2. Beak points at 0.625 x I_n to flat.
3. Ground I²T time from 0.1s to 0.5s, with 0.1s increments.
4. Ground slope: Flat, trip time tolerance is +0 / -80ms for all settings except 0.1s setting is 0.06s to 0.1s.
   Ground slope: I²T , tolerance is
   0.1s, 0.2s : +0 / -40%
   0.3s, 0.4s, 0.5s : +0 / -30%
5. The curve is shown as a multiple of the Current Rating (I_n).
6. The end of the curve is determined by the interrupting rating of the circuit breaker.
7. Curves applies from -20 °C to +50°C ambient. Temperatures above +85 °C will cause over temperature trip.
8. This curve is for 50Hz ,60Hz applications.
9. These curves are comprehensive for series IZM circuit breakers including all frame sizes, ratings, and constructions.
   The total clearing times shown include the response time for trip unit, the breaker opening and the interruption of the current.

IZM32...V(P)...PXR20/25 Maintenance Mode Curve
Arc-flash Reduction Maintenance Mode for IZM32

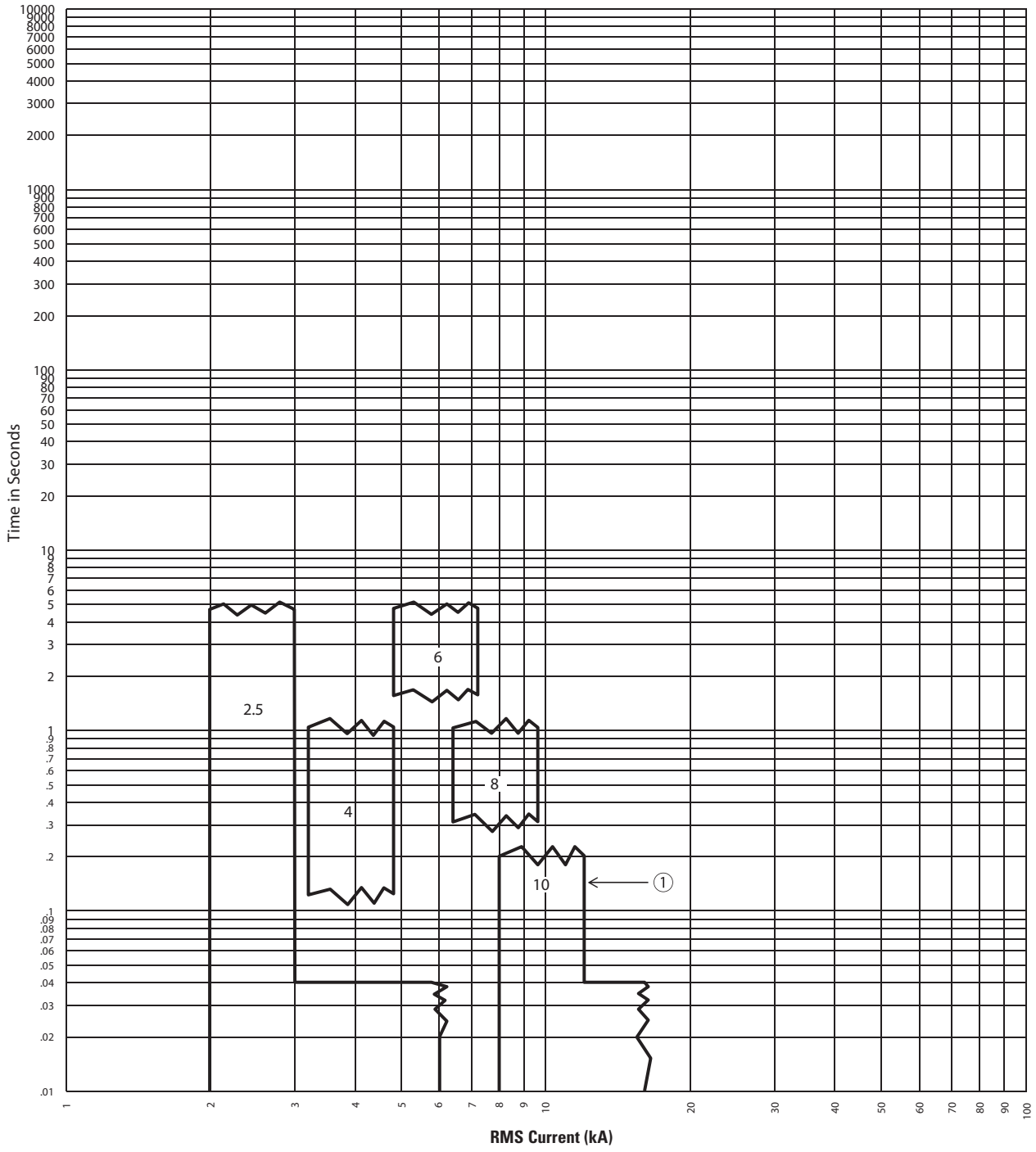

Notes:

1. Nominal reduction values have a tolerance of ± 20%.
2. The nominal Arcfault Reduction Maintenance System™ trip time is 40ms with auxiliary power supply.
3. The Maintenance Mode feature must be ENABLED via setting Maintenance Mode switch to ON position remote switch, or communications for these curves to apply.
   Maintenance Mode is in use being shown by blue LED.
4. The PXR will light the Instantaneous LED for a Maintenance Mode Trip.
5. The end of the curve is determined by the interrupting rating of the circuit breaker.
6. Curves applies from -20° C to +50° C ambient. Temperatures above +85° C will cause over temperature trip.
7. This curve is for 50Hz ,60Hz applications.
8. These curves are comprehensive for series IZM circuit breakers including all frame sizes, ratings, and constructions. The total clearing times shown include the response time for trip unit, the breaker opening and the interruption of the current.

IZM32...V(P)...PXR20/25 Long Delay(L) Curves
L-Protection: $I^{0.5}t$-Characteristic curve

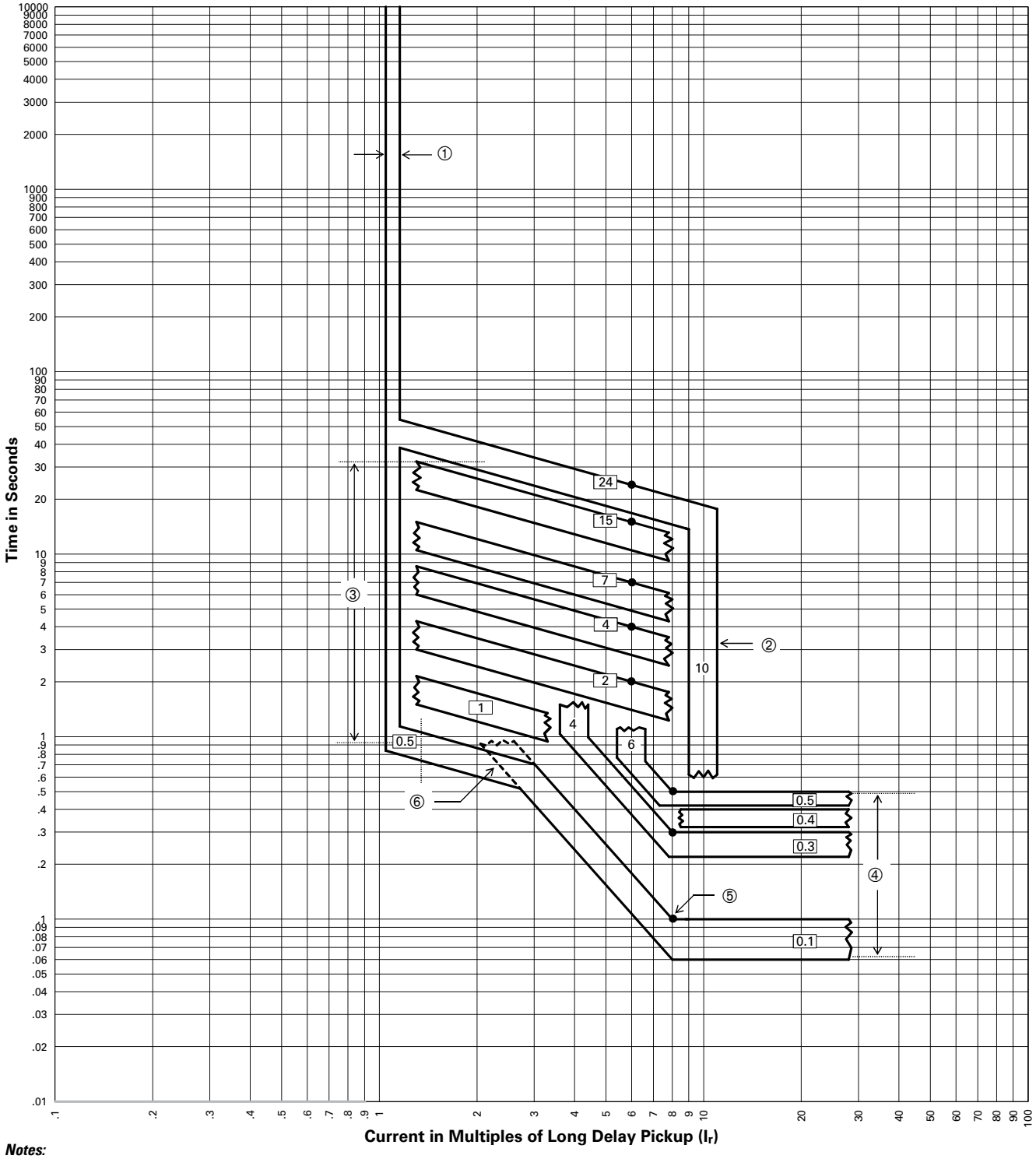

Notes:

1. This curve shown as a multiple of the LONG PU setting (I_r). The actual pickup point occurs at 110% of the I_r, with ±5% tolerance.
2. SDPU = 1.5x to 10x of I_r, have 100% ± 10% tolerance.
3. LD Time = 0.5s to 24s, have 100% +0 / -30% tolerance.
4. SD Slope = I^2T. The short pickup points have ±10% tolerance. time setting from 0.1s to 0.5s, with steps of 0.1s, except 0.2s. tolerance is 100% +0 / -30% except 0.1s, has tolerance 100% +0 / -40%.
5. I^2T slopes flattens out at 8x of I_r for top of band with FLAT time minimum value prevailing for bottom of band. For all curves the lower flat response time value projected to I^2T line will determine the other break point and shape of the curve.
6. If the short delay time is longer than long delay time, the short delay trip time will follow the long time setting.
7. If long delay thermal memory is enabled, trip times may be shorter than indicated in this chart.
8. Curves applies from -20°C to +70°C ambient. Temperatures above +85°C will cause over temperature trip.
9. This curve is for 50Hz, 60Hz applications.
10. These curves are comprehensive for series IZM circuit breakers including all frame sizes, ratings, and constructions. The total clearing times shown include the response time for trip unit, the breaker opening and the interruption of the current.

IZM32...V(P)...PXR20/25 Long Delay(L) Curves
L-Protection: I¹t-Characteristic curve

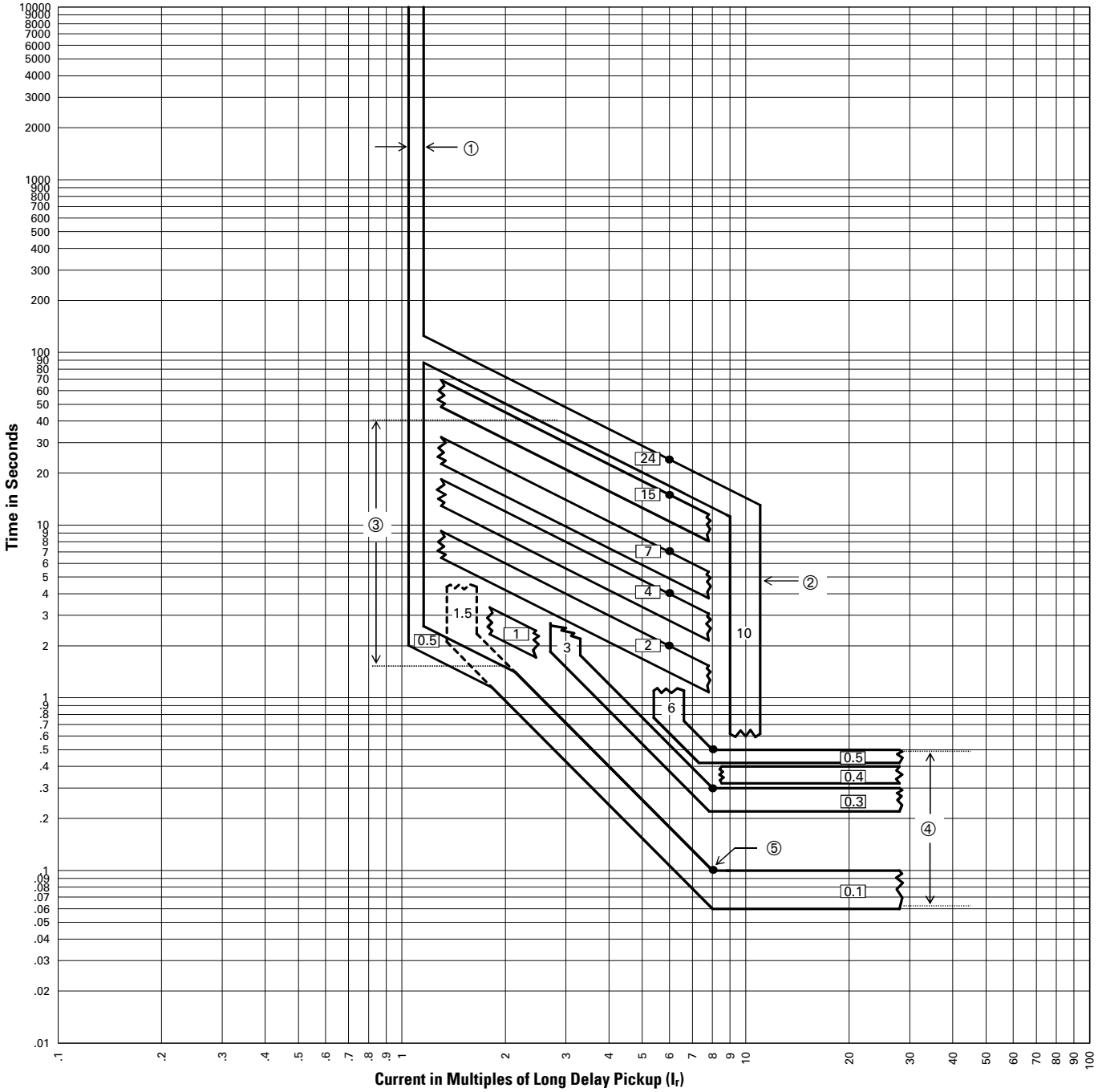

Notes:

1. This curve shown as a multiple of the LONG PU setting(I_r). The actual pickup point occurs at 110% of the I_r, with ±5% tolerance.
2. SDPU = 1.5x to 10x of I_r, have 100% ± 10% tolerance.
3. LD Time = 0.5s to 24s, have 100% +0 / -30% tolerance.
4. SD Slope = I^2T. The short pickup points have ±10% tolerance.
   time setting from 0.1s to 0.5s, with steps of 0.1s, except 0.2s.
   tolerance is 100% +0 / -30% except 0. 1s, has tolerance 100% +0 / -40%.
5. I^2T slopes flattens out at 8x of I_r for top of band with FLAT time minimum value prevailing for bottom of band. For all curves the lower flat response time value projected to I^2T line will determine the other break point and shape of the curve.
6. If long delay thermal memory is enabled, trip times may be shorter than indicated in this chart.
7. Curves applies from -20°C to +70°C ambient. Temperatures above +85°C will cause over temperature trip.
8. This curve is for 50Hz, 60Hz applications.
9. These curves are comprehensive for series IZM circuit breakers including all frame sizes, ratings, and constructions.

IZM32...V(P)...PXR20/25 Long Delay(L) Curves
L-Protection: I^4t-Characteristic curve

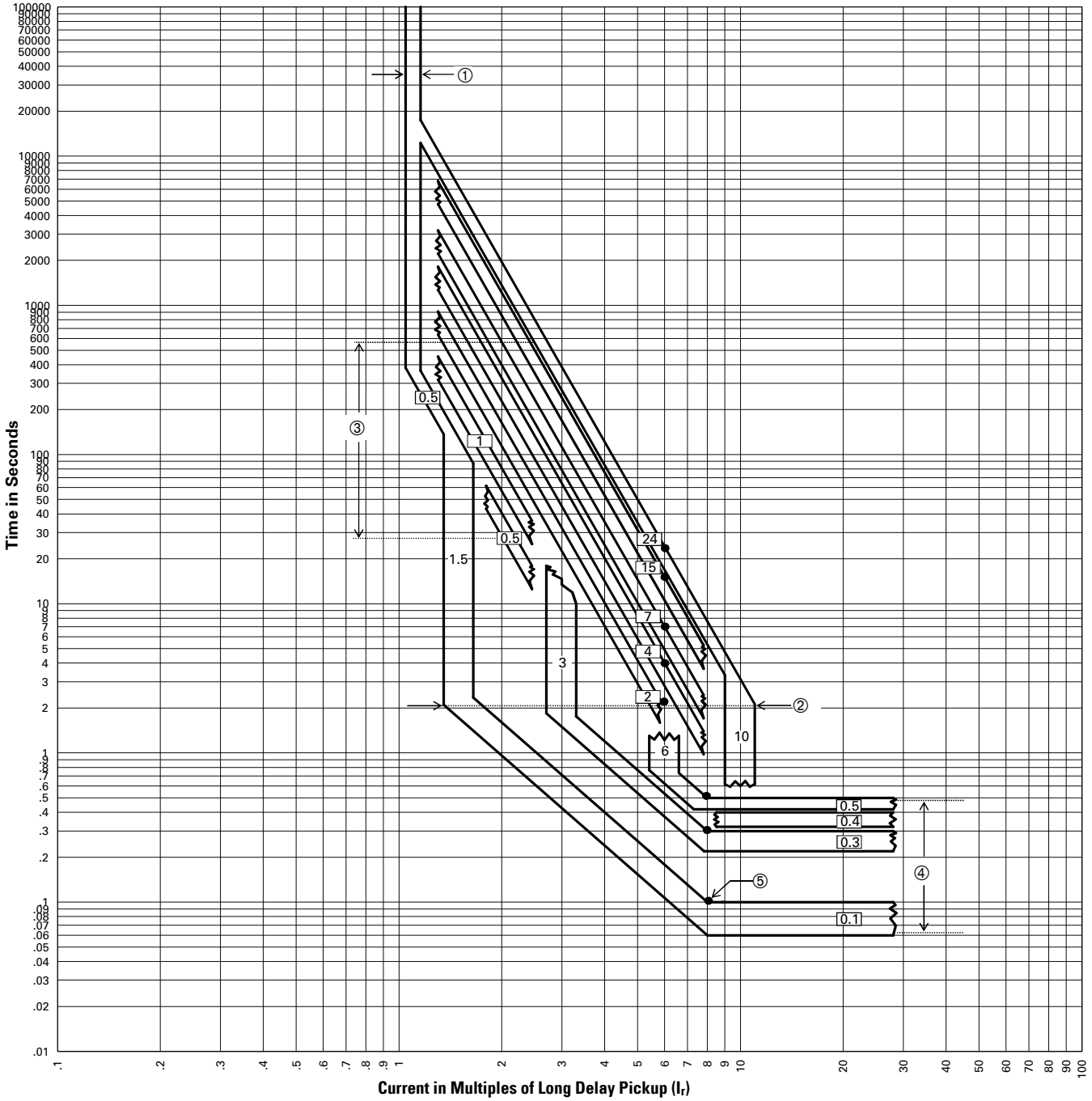

Notes:

1. This curve shown as a multiple of the LONG PU setting(I_r). The actual pickup point occurs at 110% of the I_r, with ±5% tolerance.
2. SDPU = 1.5x to 10x of I_r, have 100% ± 10% tolerance.
3. LD Time = 0.5s to 24s, have 100% +0 / -30% tolerance.
4. SD Slope = I^2T. The short pickup points have ±10% tolerance.
   time setting from 0.1s to 0.5s, with steps of 0.1s, except 0.2s.
   tolerance is 100% +0 / -30% except 0. 1s, has tolerance 100% +0 / -40%.
5. I^2T slopes flattens out at 8x of I_r for top of band with FLAT time minimum value prevailing for bottom of band. For all curves the lower flat
   response time value projected to I^2T line will determine the other break point and shape of the curve.
6. If long delay thermal memory is enabled, trip times may be shorter than indicated in this chart.
7. Curves applies from -20°C to +70°C ambient. Temperatures above +85°C will cause over temperature trip.
8. This curve is for 50Hz, 60Hz applications.
9. These curves are comprehensive for series IZM circuit breakers including all frame sizes, ratings, and constructions.
   The total clearing times shown include the response time for trip unit, the breaker opening and the interruption of the current.

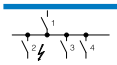

I_n: Rated operational current
I_u: Rated uninterrupted current
I_{cu}: Rated short-circuit breaking capacity
I_i: Set value non-delayed short-circuit releases

Selectivity 415 V AC
Between circuit-breakers enables the separate disconnection of faulty system sections. Selectivity exists between incoming circuitbreaker 1 and outgoing circuit-breaker 2 if, only outgoing breaker 2 trips at position 2 during a short-circuit. System sections 3 and 4 remain operational.

Selection:
Provided that the short-circuit current does not exceed those values specified (Icc rms).
These details represent the limits of selectivity. Both circuit-breakers will switch off with higher short-circuit currents. On IZM circuit-breakers with V, U releases, the delay time tsd must be at least 100 ms longer than the delay time of the next downstream levels (2, 3, 4).

Incoming circuit breaker (1)			Incoming circuit breaker IZM32..-V..-1											
		I_n [A]	800	800	800	1000	1000	1000	1250	1250	1250	1600	1600	1600
		I_{cu} [kA]	66	85	100	66	85	100	66	85	100	66	85	100
		I_i [A]	11200	11200	11200	14000	14000	14000	17500	17500	17500	19200	19200	19200
Outgoing circuit breaker (2)	I_n [A]	$I_{cu(415V)}$ [kA]	B	N	H	B	N	H	B	N	H	B	N	H
			Selectivity-limit current Is [kA]											
NZM..1 all versions	20	25-100	T	T	T	T	T	T	T	T	T	T	T	T
	25	25-100	T	T	T	T	T	T	T	T	T	T	T	T
	32	25-100	T	T	T	T	T	T	T	T	T	T	T	T
	40	25-100	T	T	T	T	T	T	T	T	T	T	T	T
	50	25-100	T	T	T	T	T	T	T	T	T	T	T	T
	63	25-100	T	T	T	T	T	T	T	T	T	T	T	T
	80	25-100	T	T	T	T	T	T	T	T	T	T	T	T
	100	25-100	T	T	T	T	T	T	T	T	T	T	T	T
	125	25-100	T	T	T	T	T	T	T	T	T	T	T	T
	160	25-100	T	T	T	T	T	T	T	T	T	T	T	T
NZM..2 all versions	20	25-150	T	T	T	T	T	T	T	T	T	T	T	T
	25	25-150	T	T	T	T	T	T	T	T	T	T	T	T
	32	25-150	T	T	T	T	T	T	T	T	T	T	T	T
	40	25-150	T	T	T	T	T	T	T	T	T	T	T	T
	50	25-150	T	T	T	T	T	T	T	T	T	T	T	T
	63	25-150	T	T	T	T	T	T	T	T	T	T	T	T
	80	25-150	T	T	T	T	T	T	T	T	T	T	T	T
	90	25-150	T	T	T	T	T	T	T	T	T	T	T	T
	100	25-150	T	T	T	T	T	T	T	T	T	T	T	T
	125	25-150	T	T	T	T	T	T	T	T	T	T	T	T
	140	25-150	T	T	T	T	T	T	T	T	T	T	T	T
	160	25-150	T	T	T	T	T	T	T	T	T	T	T	T
	200	25-150	T	T	T	T	T	T	T	T	T	T	T	T
	220	25-150	T	T	T	T	T	T	T	T	T	T	T	T
	250	25-150	T	T	T	T	T	T	T	T	T	T	T	T
	300	25-150	T	T	T	T	T	T	T	T	T	T	T	T
NZM..3 all versions	220	36-150	T	T	T	T	T	T	T	T	T	T	T	T
	250	36-150	T	T	T	T	T	T	T	T	T	T	T	T
	320	36-150	T	T	T	T	T	T	T	T	T	T	T	T
	350	36-150	T	T	T	T	T	T	T	T	T	T	T	T
	400	36-150	T	T	T	T	T	T	T	T	T	T	T	T
	450	36-150	T	T	T	T	T	T	T	T	T	T	T	T
	500	36-150	T	T	T	T	T	T	T	T	T	T	T	T
	630	36-150	T	T	T	T	T	T	T	T	T	T	T	T
NZM..4 all versions	550	50-100	T	T	T	T	T	T	T	T	T	T	T	T
	630	50-100	T	T	T	T	T	T	T	T	T	T	T	T
	800	50-100	-	-	-	T	T	T	T	T	T	T	T	T
	875	50-100	-	-	-	T	T	T	T	T	T	T	T	T
	1000	50-100	-	-	-	-	-	-	T	T	T	T	T	T
	1250	50-100	-	-	-	-	-	-	-	-	-	T	T	T
	1400	50-100	-	-	-	-	-	-	-	-	-	T	T	T
	1600	50-100	-	-	-	-	-	-	-	-	-	-	-	-

Notes
1) Data in this table are applicable to both, IZM32..-1 version with PXR trip units and also older versions IZM32.. with Digitrip
2) Coordination of breakers with various settings of trip units should be evaluated by use of xSpider software (Tripping characteristics).

T	Total selectivity
-	No selectivity

IZM circuit-breakers, IN switch-disconnectors

Selectivity: incoming circuit-breaker, outgoing circuit-breaker

IZM32..-V..-1

Incoming circuit breaker IZM32..-V..-1								
2000	2000	2000	2500	2500	2500	3200	3200	3200
66	85	100	66	85	100	66	85	100
24000	24000	24000	30000	30000	30000	32000	32000	32000
B	N	H	B	N	H	B	N	H
Prospective short circuit current ($I_{cc\ rms}$ in kA)								
T	T	T	T	T	T	T	T	T
T	T	T	T	T	T	T	T	T
T	T	T	T	T	T	T	T	T
T	T	T	T	T	T	T	T	T
T	T	T	T	T	T	T	T	T
T	T	T	T	T	T	T	T	T
T	T	T	T	T	T	T	T	T
T	T	T	T	T	T	T	T	T
T	T	T	T	T	T	T	T	T
T	T	T	T	T	T	T	T	T
T	T	T	T	T	T	T	T	T
T	T	T	T	T	T	T	T	T
T	T	T	T	T	T	T	T	T
T	T	T	T	T	T	T	T	T
T	T	T	T	T	T	T	T	T
T	T	T	T	T	T	T	T	T
T	T	T	T	T	T	T	T	T
T	T	T	T	T	T	T	T	T
T	T	T	T	T	T	T	T	T
T	T	T	T	T	T	T	T	T
T	T	T	T	T	T	T	T	T
T	T	T	T	T	T	T	T	T
T	T	T	T	T	T	T	T	T
T	T	T	T	T	T	T	T	T
T	T	T	T	T	T	T	T	T
T	T	T	T	T	T	T	T	T
T	T	T	T	T	T	T	T	T
T	T	T	T	T	T	T	T	T
T	T	T	T	T	T	T	T	T
T	T	T	T	T	T	T	T	T
T	T	T	T	T	T	T	T	T
T	T	T	T	T	T	T	T	T
T	T	T	T	T	T	T	T	T
T	T	T	T	T	T	T	T	T
T	T	T	T	T	T	T	T	T
T	T	T	T	T	T	T	T	T
T	T	T	T	T	T	T	T	T
T	T	T	T	T	T	T	T	T
T	T	T	T	T	T	T	T	T
T	T	T	T	T	T	T	T	T
T	T	T	T	T	T	T	T	T
T	T	T	T	T	T	T	T	T
T	T	T	T	T	T	T	T	T
T	T	T	T	T	T	T	T	T
T	T	T	T	T	T	T	T	T
T	T	T	T	T	T	T	T	T
T	T	T	T	T	T	T	T	T
T	T	T	T	T	T	T	T	T
T	T	T	T	T	T	T	T	T
T	T	T	T	T	T	T	T	T

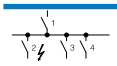

I_n: Rated operational current
I_u: Rated uninterrupted current
I_{cu}: Rated short-circuit breaking capacity
I_i: Set value non-delayed short-circuit releases

Selectivity 415 V AC
Between circuit-breakers enables the separate disconnection of faulty system sections. Selectivity exists between incoming circuitbreaker 1 and outgoing circuit-breaker 2 if, only outgoing breaker 2 trips at position 2 during a short-circuit. System sections 3 and 4 remain operational.

Selection:
Provided that the short-circuit current does not exceed those values specified (Icc rms).
These details represent the limits of selectivity. Both circuit-breakers will switch off with higher short-circuit currents. On IZM circuit-breakers with V, U releases, the delay time tsd must be at least 100 ms longer than the delay time of the next downstream levels (2, 3, 4).

Incoming circuit breaker (1)			Incoming circuit breaker IZM32..-P..-1											
		I_n [A]	800	800	800	1000	1000	1000	1250	1250	1250	1600	1600	1600
		I_{cu} [kA]	66	85	100	66	85	100	66	85	100	66	85	100
		I_i [A]	11200	11200	11200	14000	14000	14000	17500	17500	17500	19200	19200	19200
Outgoing circuit breaker (2)	I_n [A]	$I_{cu(415V)}$ [kA]	B	N	H	B	N	H	B	N	H	B	N	H
			Selectivity-limit current Is [kA]											
NZM..1 all versions	20	25-100	T	T	T	T	T	T	T	T	T	T	T	T
	25	25-100	T	T	T	T	T	T	T	T	T	T	T	T
	32	25-100	T	T	T	T	T	T	T	T	T	T	T	T
	40	25-100	T	T	T	T	T	T	T	T	T	T	T	T
	50	25-100	T	T	T	T	T	T	T	T	T	T	T	T
	63	25-100	T	T	T	T	T	T	T	T	T	T	T	T
	80	25-100	T	T	T	T	T	T	T	T	T	T	T	T
	100	25-100	T	T	T	T	T	T	T	T	T	T	T	T
	125	25-100	T	T	T	T	T	T	T	T	T	T	T	T
	160	25-100	T	T	T	T	T	T	T	T	T	T	T	T
NZM..2 all versions	20	25-150	T	T	T	T	T	T	T	T	T	T	T	T
	25	25-150	T	T	T	T	T	T	T	T	T	T	T	T
	32	25-150	T	T	T	T	T	T	T	T	T	T	T	T
	40	25-150	T	T	T	T	T	T	T	T	T	T	T	T
	50	25-150	T	T	T	T	T	T	T	T	T	T	T	T
	63	25-150	T	T	T	T	T	T	T	T	T	T	T	T
	80	25-150	T	T	T	T	T	T	T	T	T	T	T	T
	90	25-150	T	T	T	T	T	T	T	T	T	T	T	T
	100	25-150	T	T	T	T	T	T	T	T	T	T	T	T
	125	25-150	T	T	T	T	T	T	T	T	T	T	T	T
	140	25-150	T	T	T	T	T	T	T	T	T	T	T	T
	160	25-150	T	T	T	T	T	T	T	T	T	T	T	T
	200	25-150	T	T	T	T	T	T	T	T	T	T	T	T
	220	25-150	T	T	T	T	T	T	T	T	T	T	T	T
	250	25-150	T	T	T	T	T	T	T	T	T	T	T	T
	300	25-150	T	T	T	T	T	T	T	T	T	T	T	T
NZM..3 all versions	220	36-150	T	T	T	T	T	T	T	T	T	T	T	T
	250	36-150	T	T	T	T	T	T	T	T	T	T	T	T
	320	36-150	T	T	T	T	T	T	T	T	T	T	T	T
	350	36-150	T	T	T	T	T	T	T	T	T	T	T	T
	400	36-150	T	T	T	T	T	T	T	T	T	T	T	T
	450	36-150	T	T	T	T	T	T	T	T	T	T	T	T
	500	36-150	T	T	T	T	T	T	T	T	T	T	T	T
	630	36-150	T	T	T	T	T	T	T	T	T	T	T	T
NZM..4 all versions	550	50-100	T	T	T	T	T	T	T	T	T	T	T	T
	630	50-100	T	T	T	T	T	T	T	T	T	T	T	T
	800	50-100	-	-	-	T	T	T	T	T	T	T	T	T
	875	50-100	-	-	-	T	T	T	T	T	T	T	T	T
	1000	50-100	-	-	-	-	-	-	T	T	T	T	T	T
	1250	50-100	-	-	-	-	-	-	-	-	-	T	T	T
	1400	50-100	-	-	-	-	-	-	-	-	-	T	T	T
	1600	50-100	-	-	-	-	-	-	-	-	-	-	-	T

Notes
1) Data in this table are applicable to both, IZM32..-1 version with PXR trip units and also older versions IZM32.. with Digitrip
2) Coordination of breakers with various settings of trip units should be evaluated by use of xSpider software (Tripping characteristics).

T	Total selectivity
-	No selectivity

IZM circuit-breakers, IN switch-disconnectors

Selectivity: incoming circuit-breaker, outgoing circuit-breaker

IZM32..-P..-1

Incoming circuit breaker IZM32..-P..-1								
2000	2000	2000	2500	2500	2500	3200	3200	3200
66	85	100	66	85	100	66	85	100
24000	24000	24000	30000	30000	30000	32000	32000	32000
B	N	H	B	N	H	B	N	H
Prospective short circuit current ($I_{cc\ rms}$ in kA)								
T	T	T	T	T	T	T	T	T
T	T	T	T	T	T	T	T	T
T	T	T	T	T	T	T	T	T

				IZM32B…08…	IZM32B…10…	IZM32B…12…
General						
Standards				IEC/EN 60947		
Ambient temperature	Storage		°C	-40 - +70 (Devices with LCD display -20 - +70)		
	Operation (open)		°C	-25 - +70 (Devices with LCD display -20 - +70)		
Built-in position						
Utility category				B	B	B
Protection type				IP20, IP55 with protective cover		
Direction of incoming supply				Any		
Main contacts						
Rated operational current = Rated uninterrupted current		$I_n = I_u$	A	800	1000	1250
Rated uninterrupted current at 50 °C[1)]		I_u	A	800	1000	1250
Rated uninterrupted current at 60 °C[1)]		I_u	A	800	1000	1250
Rated uninterrupted current at 70 °C[1)]		I_u	A	800	1000	1250
Rated impulse withstand voltage		U_{imp}	V AC	8000	8000	8000
Rated operational voltage		U_e	V AC	690	690	690
Use in IT electrical power networks up to U = 440 V		I_{IT}	kA	13	13	13
Overvoltage category/pollution degree				III/3	III/3	III/3
Rated insulation voltage		U_i	V	1000	1000	1000
Switching capacity						
Rated short-circuit making capacity	Up to 440 V 50/60 Hz	I_{cm}	kA	137	137	137
	Up to 690 V 50/60 Hz	I_{cm}	kA	137	137	137
Rated short-time withstand current 50/60 Hz	t = 1 s	I_{cw}	kA	65	65	65
	t = 3 s	I_{cw}	kA	-	-	-
Rated short-circuit breaking capacity I_{cn}						
IEC/EN 60947 Operating sequence I_{cu} O-t-CO						
Up to 240 V 50/60 Hz		I_{cu}	kA	66	66	66
Up to 440 V 50/60 Hz		I_{cu}	kA	66	66	66
Up to 690 V 50/60 Hz		I_{cu}	kA	66	66	66
Up to 1100 V 50/60 Hz		I_{cu}	kA	-	-	-
IEC/EN 60947 Operating sequence I_{cs} O-t-CO-t-CO						
Up to 240 V 50/60 Hz		I_{cs}	kA	66	66	66
Up to 440 V 50/60 Hz		I_{cs}	kA	66	66	66
Up to 690 V 50/60 Hz		I_{cs}	kA	66	66	66
Up to 1100 V 50/60 Hz		I_{cs}	kA	-	-	-
Switching times						
Total opening delay			ms	30	30	30
Closing delay			ms	35	35	35
Closing delay electrical (via closing release)			ms	40	40	40
Opening delay electrical (via shunt release / undervoltage release)			ms	35/70	35/70	35/70
Opening delay via trip electronics (non-delayed short-circuit release)			ms	35	35	35
Durability						
Mechanical, without maintenance		Operations		12500	12500	12500
Mechanical, with maintenance		Operations		20000	20000	20000
Electrical, without maintenance		Operations		10000	10000	10000
Electrical, with maintenance		Operations		10000	10000	10000
Maximum operating frequency		Operations/h		60	60	60
Heat dissipation at rated operational current In 3-phase symmetric loading	Fixed		W	40	60	90
	Withdrawable		W	85	130	200
Weight						
Fixed	3 pole		kg	58	58	58
	4 pole		kg	72	72	72
Withdrawable	3 pole		kg	70	70	70
	4 pole		kg	88	88	88
Empty cassette	3 pole		kg	34	34	34
	4 pole		kg	38	38	38

Notes [1)] Permissible continuous current for circuit-breakers used at different temperatures within switchgear. The expected internal temperatures can be estimated according to the applicable IEC regulations.

IZM32..-1

IZM32B…16…	IZM32B…20…	IZM32B…25…	IZM32B…32…	IZM32N…08…	IZM32N…10…	IZM32N…12…
IEC/EN 60947						
-40 - +70 (Devices with LCD display -20 - +70)						
-25 - +70 (Devices with LCD display -20 - +70)						
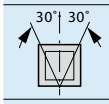	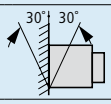					
B	B	B	B	B	B	B
IP20, IP55 with protective cover						
Any						
1600	2000	2500	3200	800	1000	1250
1600	2000	2500	3100	800	1000	1250
1600	2000	2500	2800	800	1000	1250
1600	2000	2500	2550	800	1000	1250
8000	8000	8000	8000	8000	8000	8000
690	690	690	690	690	690	690
23	28	39	39	13	13	13
III/3	III/3	III/3	III/3	III/3	III/3	III/3
1000	1000	1000	1000	1000	1000	1000
137	137	137	137	179	179	179
137	137	137	137	179	179	179
65	65	65	65	85	85	85
-	50	50	50	65	65	65
66	66	66	66	85	85	85
66	66	66	66	85	85	85
66	66	66	66	85	85	85
-	-	-	-	-	-	-
66	66	66	66	85	85	85
66	66	66	66	85	85	85
66	66	66	66	85	85	85
-	-	-	-	-	-	-
30	30	30	30	30	30	30
35	35	35	35	35	35	35
40	40	40	40	40	40	40
35/70	35/70	35/70	35/70	35/70	35/70	35/70
35	35	35	35	35	35	35
12500	10000	8000	8000	10000	10000	10000
20000	16000	12800	12800	16000	16000	16000
10000	10000	8000	8000	10000	10000	10000
10000	10000	8000	8000	10000	10000	10000
60	60	60	60	60	60	60
150	190	200	320	35	50	70
330	330	500	800	70	95	140
58	63	68	68	68	68	68
72	78	86	86	86	86	86
70	75	86	86	80	80	80
88	94	112	112	102	102	102
34	58	58	60	34	34	34
38	60	60	73	38	38	38

				IZM32N…16…	IZM32N…20…	IZM32N…25…
General						
Standards				IEC/EN 60947		
Ambient temperature	Storage		°C	-40 - +70 (Devices with LCD display -20 - +70)		
	Operation (open)		°C	-25 - +70 (Devices with LCD display -20 - +70)		
Built-in position						
Utility category				B	B	B
Protection type				IP20, IP55 with protective cover		
Direction of incoming supply				Any		
Main contacts						
Rated operational current = Rated uninterrupted current		$I_n = I_u$	A	1600	2000	2500
Rated uninterrupted current at 50 °C[1)]		I_u	A	1600	2000	2500
Rated uninterrupted current at 60 °C[1)]		I_u	A	1600	2000	2500
Rated uninterrupted current at 70 °C[1)]		I_u	A	1600	2000	2500
Rated impulse withstand voltage		U_{imp}	V AC	8000	8000	8000
Rated operational voltage		U_e	V AC	690	690	690
Use in IT electrical power networks up to U = 440 V		I_{IT}	kA	23	28	39
Overvoltage category/pollution degree				III/3	III/3	III/3
Rated insulation voltage		U_i	V	1000	1000	1000
Switching capacity						
Rated short-circuit making capacity	Up to 440 V 50/60 Hz	I_{cm}	kA	179	179	179
	Up to 690 V 50/60 Hz	I_{cm}	kA	179	179	179
Rated short-time withstand current 50/60 Hz	t = 1 s	I_{cw}	kA	85	85	85
	t = 3 s	I_{cw}	kA	65	65	65
Rated short-circuit breaking capacity I_{cn}						
IEC/EN 60947 Operating sequence I_{cu} O-t-CO						
Up to 240 V 50/60 Hz		I_{cu}	kA	85	85	85
Up to 440 V 50/60 Hz		I_{cu}	kA	85	85	85
Up to 690 V 50/60 Hz		I_{cu}	kA	85	85	85
Up to 1100 V 50/60 Hz		I_{cu}	kA	-	-	-
IEC/EN 60947 Operating sequence I_{cs} O-t-CO-t-CO						
Up to 240 V 50/60 Hz		I_{cs}	kA	85	85	85
Up to 440 V 50/60 Hz		I_{cs}	kA	85	85	85
Up to 690 V 50/60 Hz		I_{cs}	kA	85	85	85
Up to 1100 V 50/60 Hz		I_{cs}	kA	-	-	-
Switching times						
Total opening delay			ms	30	30	30
Closing delay			ms	35	35	35
Closing delay electrical (via closing release)			ms	40	40	40
Opening delay electrical (via shunt release / undervoltage release)			ms	35/70	35/70	35/70
Opening delay via trip electronics (non-delayed short-circuit release)			ms	35	35	35
Durability						
Mechanical, without maintenance		Operations		10000	10000	8000
Mechanical, with maintenance		Operations		16000	16000	12800
Electrical, without maintenance		Operations		10000	10000	8000
Electrical, with maintenance		Operations		10000	10000	8000
Maximum operating frequency		Operations/h		60	60	60
Heat dissipation at rated operational current In 3-phase symmetric loading	Fixed		W	120	190	200
	Withdrawable		W	240	380	500
Weight						
Fixed	3 pole		kg	68	68	70
	4 pole		kg	86	86	89
Withdrawable	3 pole		kg	80	80	88
	4 pole		kg	102	102	115
Empty cassette	3 pole		kg	34	34	58
	4 pole		kg	38	38	60

Notes [1)] Permissible continuous current for circuit-breakers used at different temperatures within switchgear. The expected internal temperatures can be estimated according to the applicable IEC regulations.

IZM32..-1

IZM32N…32…	IZM32H…08…	IZM32H…10…	IZM32H…12…	IZM32H…16…	IZM32H…20…	IZM32H…25…
IEC/EN 60947						
-40 - +70 (Devices with LCD display -20 - +70)						
-25 - +70 (Devices with LCD display -20 - +70)						
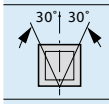	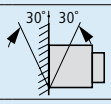					
B	B	B	B	B	B	B
IP20, IP55 with protective cover						
Any						
3200	800	1000	1250	1600	2000	2500
3100	800	1000	1250	1600	2000	2500
2800	800	1000	1250	1600	2000	2500
2550	800	1000	1250	1600	2000	2500
8000	8000	8000	8000	8000	8000	8000
690	690	690	690	690	690	690
39	13	13	13	23	28	39
III/3	III/3	III/3	III/3	III/3	III/3	III/3
1000	1000	1000	1000	1000	1000	1000
179	210	210	210	210	210	210
179	179	179	179	179	179	179
85	85	85	85	85	85	85
65	65	65	65	65	65	65
85	100	100	100	100	100	100
85	100	100	100	100	100	100
85	85	85	85	85	85	85
-	-	-	-	-	-	-
85	100	100	100	100	100	100
85	100	100	100	100	100	100
85	85	85	85	85	85	85
-	-	-	-	-	-	-
30	30	30	30	30	30	30
35	35	35	35	35	35	35
40	40	40	40	40	40	40
35/70	35/70	35/70	35/70	35/70	35/70	35/70
35	35	35	35	35	35	35
8000	10000	10000	10000	10000	10000	8000
12800	16000	16000	16000	16000	16000	12800
8000	10000	10000	10000	10000	10000	8000
8000	10000	10000	10000	10000	10000	8000
60	60	60	60	60	60	60
320	30	50	70	120	190	200
800	60	95	140	240	380	500
70	68	68	68	68	68	70
89	86	86	86	86	86	89
88	80	80	80	80	80	88
115	102	102	102	102	102	115
60	34	34	34	34	58	58
73	38	38	38	38	60	60

				IZM32H…32…
General				
Standards				IEC/EN 60947
Ambient temperature	Storage		°C	-40 - +70 (Devices with LCD display -20 - +70)
	Operation (open)		°C	-25 - +70 (Devices with LCD display -20 - +70)
Built-in position				
Utility category				B
Protection type				IP20, IP55 with protective cover
Direction of incoming supply				Any
Main contacts				
Rated operational current = Rated uninterrupted current		$I_n = I_u$	A	3200
Rated uninterrupted current at 50 °C[1)]		I_u	A	3100
Rated uninterrupted current at 60 °C[1)]		I_u	A	2800
Rated uninterrupted current at 70 °C[1)]		I_u	A	2550
Rated impulse withstand voltage		U_{imp}	V AC	8000
Rated operational voltage		U_e	V AC	690
Use in IT electrical power networks up to U = 440 V		I_{IT}	kA	39
Overvoltage category/pollution degree				III/3
Rated insulation voltage		U_i	V	1000
Switching capacity				
Rated short-circuit making capacity	Up to 440 V 50/60 Hz	I_{cm}	kA	210
	Up to 690 V 50/60 Hz	I_{cm}	kA	179
Rated short-time withstand current 50/60 Hz	t = 1 s	I_{cw}	kA	85
	t = 3 s	I_{cw}	kA	65
Rated short-circuit breaking capacity I_{cn}				
IEC/EN 60947 Operating sequence I_{cu} O-t-CO				
Up to 240 V 50/60 Hz		I_{cu}	kA	100
Up to 440 V 50/60 Hz		I_{cu}	kA	100
Up to 690 V 50/60 Hz		I_{cu}	kA	85
Up to 1100 V 50/60 Hz		I_{cu}	kA	-
IEC/EN 60947 Operating sequence I_{cs} O-t-CO-t-CO				
Up to 240 V 50/60 Hz		I_{cs}	kA	100
Up to 440 V 50/60 Hz		I_{cs}	kA	100
Up to 690 V 50/60 Hz		I_{cs}	kA	85
Up to 1100 V 50/60 Hz		I_{cs}	kA	-
Switching times				
Total opening delay			ms	30
Closing delay			ms	35
Closing delay electrical (via closing release)			ms	40
Opening delay electrical (via shunt release / undervoltage release)			ms	35/70
Opening delay via trip electronics (non-delayed short-circuit release)			ms	35
Durability				
Mechanical, without maintenance		Operations		8000
Mechanical, with maintenance		Operations		12800
Electrical, without maintenance		Operations		8000
Electrical, with maintenance		Operations		8000
Maximum operating frequency		Operations/h		60
Heat dissipation at rated operational current In 3-phase symmetric loading	Fixed		W	320
	Withdrawable		W	800
Weight				
Fixed	3 pole		kg	70
	4 pole		kg	89
Withdrawable	3 pole		kg	88
	4 pole		kg	115
Empty cassette	3 pole		kg	60
	4 pole		kg	73

Notes [1)] Permissible continuous current for circuit-breakers used at different temperatures within switchgear. The expected internal temperatures can be estimated according to the applicable IEC regulations.

IN32..-1

				IN32B…08…	IN32B…10…	IN32B…12…
General						
Standards				IEC/EN 60947		
Ambient temperature	Storage		°C	-40 - +70	-40 - +70	-40 - +70
	Operation (open)		°C	-25 - +70	-25 - +70	-25 - +70
Built-in position				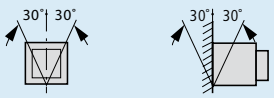		
Utility category				B	B	B
Protection type				IP20, IP55 with protective cover		
Direction of incoming supply				Any		
Main contacts						
Rated operational current = Rated uninterrupted current		$I_n = I_u$	A	800	1000	1250
Rated uninterrupted current at 50 °C[1)]		I_u	A	800	1000	1250
Rated uninterrupted current at 60 °C[1)]		I_u	A	800	1000	1250
Rated uninterrupted current at 70 °C[1)]		I_u	A	800	1000	1250
Rated impulse withstand voltage		U_{imp}	V AC	8000	8000	8000
Rated operational voltage		U_e	V AC	690	690	690
Use in IT electrical power networks up to U = 440 V		I_{IT}	kA	13	13	13
Overvoltage category/pollution degree				III/3	III/3	III/3
Rated insulation voltage		U_i	V	1000	1000	1000
Switching capacity						
Rated short-circuit making capacity	Up to 440 V 50/60 Hz	I_{cm}	kA	143	143	143
	Up to 690 V 50/60 Hz	I_{cm}	kA	143	143	143
Rated short-time withstand current 50/60 Hz	t = 1 s	I_{cw}	kA	65	65	65
	t = 3 s	I_{cw}	kA	-	-	-
Switching times						
Total opening delay			ms	30	30	30
Closing delay			ms	35	35	35
Closing delay electrical (via closing release)			ms	40	40	40
Opening delay electrical (via shunt release / undervoltage release)			ms	35/70	35/70	35/70
Durability						
Mechanical, without maintenance		Operations		12500	12500	12500
Mechanical, with maintenance		Operations		20000	20000	20000
Electrical, without maintenance		Operations		10000	10000	10000
Electrical, with maintenance		Operations		10000	10000	10000
Maximum operating frequency		Operations/h		60	60	60
Heat dissipation at rated operational current In 3-phase symmetric loading	Fixed		W	40	60	90
	Withdrawable		W	85	130	200
Weight						
Fixed	3 pole		kg	58	58	58
	4 pole		kg	72	72	72
Withdrawable	3 pole		kg	70	70	70
	4 pole		kg	88	88	88
Empty cassette	3 pole		kg	34	34	34
	4 pole		kg	38	38	38

Notes [1)] Permissible continuous current for circuit-breakers used at different temperatures within switchgear. The expected internal temperatures can be estimated according to the applicable IEC regulations.

IN32B…16…	**IN32B…20…**	**IN32B…25…**	**IN32B…32…**
IEC/EN 60947			
-40 - +70	-40 - +70	-40 - +70	-40 - +70
-25 - +70	-25 - +70	-25 - +70	-25 - +70
	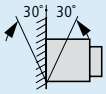		
B	B	B	B
IP20, IP55 with protective cover			
Any			
1600	2000	2500	3200
1600	2000	2500	3200
1600	2000	2500	3200
1600	2000	2500	3200
8000	8000	8000	8000
690	690	690	690
23	23	39	39
III/3	III/3	III/3	III/3
1000	1000	1000	1000
143	143	143	143
143	143	143	143
65	65	65	65
-	50	50	50
30	30	30	30
35	35	35	35
40	40	40	40
35/70	35/70	35/70	35/70
12500	10000	8000	8000
20000	16000	12800	12800
10000	10000	8000	8000
10000	10000	8000	8000
60	60	60	60
150	190	200	320
330	330	500	800
58	63	68	68
72	78	86	86
70	75	86	86
88	94	112	112
34	58	58	60
38	60	60	73

IN32..-1

				IN32N…08…	IN32N…10…	IN32N…12…
General						
Standards				IEC/EN 60947		
Ambient temperature	Storage		°C	-40 - +70	-40 - +70	-40 - +70
	Operation (open)		°C	-25 - +70	-25 - +70	-25 - +70
Built-in position						
Utility category				B	B	B
Protection type				IP20, IP55 with protective cover		
Direction of incoming supply				Any		
Main contacts						
Rated operational current = Rated uninterrupted current		$I_n = I_u$	A	800	1000	1250
Rated uninterrupted current at 50 °C[1]		I_u	A	800	1000	1250
Rated uninterrupted current at 60 °C[1]		I_u	A	800	1000	1250
Rated uninterrupted current at 70 °C[1]		I_u	A	800	1000	1250
Rated impulse withstand voltage		U_{imp}	V AC	8000	8000	8000
Rated operational voltage		U_e	V AC	690	690	690
Use in IT electrical power networks up to U = 440 V		I_{IT}	kA	13	13	13
Overvoltage category/pollution degree				III/3	III/3	III/3
Rated insulation voltage		U_i	V	1000	1000	1000
Switching capacity						
Rated short-circuit making capacity	Up to 440 V 50/60 Hz	I_{cm}	kA	187	187	187
	Up to 690 V 50/60 Hz	I_{cm}	kA	187	187	187
Rated short-time withstand current 50/60 Hz	t = 1 s	I_{cw}	kA	85	85	85
	t = 3 s	I_{cw}	kA	65	65	65
Switching times						
Total opening delay			ms	30	30	30
Closing delay			ms	35	35	35
Closing delay electrical (via closing release)			ms	40	40	40
Opening delay electrical (via shunt release / undervoltage release)			ms	35/70	35/70	35/70
Durability						
Mechanical, without maintenance		Operations		10000	10000	10000
Mechanical, with maintenance		Operations		16000	16000	16000
Electrical, without maintenance		Operations		10000	10000	10000
Electrical, with maintenance		Operations		10000	10000	10000
Maximum operating frequency		Operations/h		60	60	60
Heat dissipation at rated operational current In 3-phase symmetric loading	Fixed		W	35	50	70
	Withdrawable		W	70	95	140
Weight						
Fixed	3 pole		kg	68	68	68
	4 pole		kg	86	86	86
Withdrawable	3 pole		kg	80	80	80
	4 pole		kg	102	102	102
Empty cassette	3 pole		kg	34	34	34
	4 pole		kg	38	38	38

Notes [1] Permissible continuous current for circuit-breakers used at different temperatures within switchgear. The expected internal temperatures can be estimated according to the applicable IEC regulations.

IN32N…16…	IN32N…20…	IN32N…25…	IN32N…32…
IEC/EN 60947			
-40 - +70	-40 - +70	-40 - +70	-40 - +70
-25 - +70	-25 - +70	-25 - +70	-25 - +70
	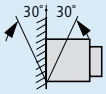		
B	B	B	B
IP20, IP55 with protective cover			
Any			
1600	2000	2500	3200
1600	2000	2500	3100
1600	2000	2500	2800
1600	2000	2500	2550
8000	8000	8000	8000
690	690	690	690
23	28	39	39
III/3	III/3	III/3	III/3
1000	1000	1000	1000
187	187	187	187
187	187	187	187
85	85	85	85
65	65	65	65
30	30	30	30
35	35	35	35
40	40	40	40
35/70	35/70	35/70	35/70
10000	10000	8000	8000
16000	16000	12800	12800
10000	10000	8000	8000
10000	10000	8000	8000
60	60	60	60
120	190	200	320
240	380	500	800
68	68	70	70
86	86	89	89
80	80	88	88
102	102	115	115
34	58	58	60
38	60	60	73

IZM-AS, IZM-OTS, IZM-CS, IZM-S...

			Auxiliary contact, overload trip switch and cell signalling switch		
			IZM-AS...	**IZM-OTS**	**IZM-CS...**
Rated breaking capacity					
Inductive load					
250 V AC		A	10	10	10
125 V DC		A	0.5	0.5	0.5
250 V DC		A	0.25	0.25	0.25

			Voltage releases				
			IZM-ST24DC IZM-STS24DC	**IZM-ST48DC IZM-STS48DC**	**IZM-ST60DC**	**IZM-ST110AD IZM-STS110AD**	**IZM-ST230AD IZM-STS230AD**
Rated control voltage							
AC 50/60 Hz	U_S	V	-	-	-	110 - 127	208 - 240
DC	U_S	V	24	48	60	110 - 125	220 - 250
Power consumption							
AC		VA	-	-	-	(pickup 450)	(pickup 450)
DC		W	(pickup 250)	(pickup 250)	(pickup 250)	(pickup 450)	(pickup 450)
Response time of the circuit-breaker with Us		ms	35	35	35	35	35
Operating range							
Drop-out voltage							
AC operated 50/60 Hz	Drop-out	x U_C	-	-	-	-	-
pickup voltage							
	pickup	x U_C	Acc. to IEC standard	Acc. to IEC standard	Acc. to IEC standard	Acc. to IEC standard	Acc. to IEC standard

			Closing releases				
			IZM-SR24DC	**IZM-SR48DC**	**IZM-SR60DC**	**IZM-SR110AD**	**IZM-SR230AD**
Rated control voltage							
AC 50/60 Hz	U_S	V	-	-	-	110 - 127	208 - 240
DC	U_S	V	24	48	60	110 - 125	220 - 250
Power consumption							
AC		VA	-	-	-	(pickup 450)	(pickup 450)
DC		W	(pickup 250)	(pickup 250)	(pickup 250)	(pickup 450)	(pickup 450)
Response time of the circuit-breaker with Us		ms	40	40	40	40	40
Operating range							
Drop-out voltage							
AC operated 50/60 Hz	Drop-out	x U_C	-	-	-	-	-
pickup voltage							
	pickup	x U_C	Acc. to IEC standard	Acc. to IEC standard	Acc. to IEC standard	Acc. to IEC standard	Acc. to IEC standard

			Undervoltage releases			
			IZM-UVR24DC	**IZM-UVR32DC**	**IZM-UVR48DC**	**IZM-UVR60DC**
Rated control voltage						
AC 50/60 Hz	U_S	V	-	-	-	-
DC	U_S	V	24	32	48	60
Power consumption						
AC		VA	-	-	-	-
DC		W	18 (pickup 250)	15 (pickup 275)	18 (pickup 275)	18 (pickup 275)
Response time of the circuit-breaker with Us		ms	70	70	70	70
Operating range						
Drop-out voltage						
AC operated 50/60 Hz	Drop-out	x U_C	Acc. to IEC standard	Acc. to IEC standard	Acc. to IEC standard	Acc. to IEC standard
pickup voltage						
	pickup	x U_C	Acc. to IEC standard	Acc. to IEC standard	Acc. to IEC standard	Acc. to IEC standard

			Undervoltage releases				
			IZM-UVR110AC	**IZM-UVR110DC**	**IZM-UVR220DC**	**IZM-UVR230AC**	**IZM-UVR400AC**
Rated control voltage							
AC 50/60 Hz	U_S	V	110 - 127	-	-	208 - 240	380 - 415
DC	U_S	V	-	110 - 125	220 - 250	-	-
Power consumption							
AC		VA	10 (pickup 450)	-	-	10 (pickup 400)	10 (pickup 480)
DC		W	-	10 (pickup 450)	10 (pickup 450)	-	-
Response time of the circuit-breaker with Us		ms	70	70	70	70	70
Operating range							
Drop-out voltage							
AC operated 50/60 Hz	Drop-out	x U_C	Acc. to IEC standard	Acc. to IEC standard	Acc. to IEC standard	Acc. to IEC standard	Acc. to IEC standard
pickup voltage							
	pickup	x U_C	Acc. to IEC standard	Acc. to IEC standard	Acc. to IEC standard	Acc. to IEC standard	Acc. to IEC standard

			Motor operator						
			IZM-M24DC	**IZM-M48DC**	**IZM-M60DC**	**IZM-M110DC**	**IZM-M220DC**	**IZM-M110AC**	**IZM-M230AC**
Rated control voltage									
AC 50/60 Hz	U_S	V	-	-	-	-	-	110 - 127	208 - 240
DC	U_S	V	24	48	60	110 - 125	220 - 250	-	-
Necessary time required for charging of the spring-operated stored energy mechanism at 1 x U_S		s	5	5	5	5	5	5	5
Rated operational current		A	12	5	5	2	1	2	1
Starting current		A	36	25	25	12	6	12	6
Power consumption									
AC 50/60 Hz		VA	300	250	250	250	250	250	250
DC		W	300	250	250	250	250	250	250

Technical data

		IZMX-PCAM	IZMX-MCAM	IZMX-ECAM
General				
Dimensions (W x H x D)	mm	24 x 105 x 802	4 x 105 x 802	4 x 105 x 802
Mounting		Auxiliary terminals	Auxiliary terminals	Auxiliary terminals
Protection type		IP20	IP20	IP20
Power supply	V DC	24 V DC	24 V DC	24 V DC
LED display		Status	Status	Status
		SF	Transmit	
		BF	Receive	
Network				
Ethernet		–	–	RJ45, socket
PROFIBUS		SUB-D 9 pole, socket	–	–
Modbus		–	Plug-in screw terminals	–
Function		Slave	Slave	TCP/IP user
Interfaces		RS485	RS485	Ethernet
Protocol		PROFIBUS DP	Modbus-RTU	Modbus TCP, http(s), SMTP
Baud Rates		automatic search up to 12 MBit/s	1200/4800/9600/19200 Bit/s, adjustable via PXR	automatic search up to 100 MBit/s
Bus terminating resistors		In plug as required	120 Ω external	–
Bus addresses		1 - 125, can be set via PXR	1 - 247, can be set via PXR	IP, can be set via PXR
Maximum distance		2.4 km	1.2 km	100 m
Supported functions		Cyclical data transfer	Function:: 03 = read register 04 = read word variables 08 = connection test 16 = write register	Webserver on board

Altitude Derating Factors

Altitude [m]	Voltage Correction	Current Correction
2000	1.000	1.000
2150	0.989	0.998
2300	0.976	0.995
2450	0.963	0.993
2600	0.950	0.990
2750	0.933	0.987
2900	0.917	0.983
3050	0.900	0.980
3200	0.883	0.977
3350	0.867	0.973
3500	0.850	0.970
3650	0.833	0.967
3800	0.817	0.963
3950	0.800	0.960
5000	0.700	0.940

Altitude factors
IZM series circuit breakers can be applied at their full voltage and current ratings up to a maximum altitude of 2000 meters above sea level. When installed at higher altitudes, the ratings are subject to correction factors. Short circuit current is not affected as long as the voltage is rated in accordance with the table.

IZM32 Fixed Type Dimensions and Horizontal Board Dimensions (3P, 800~3200A)

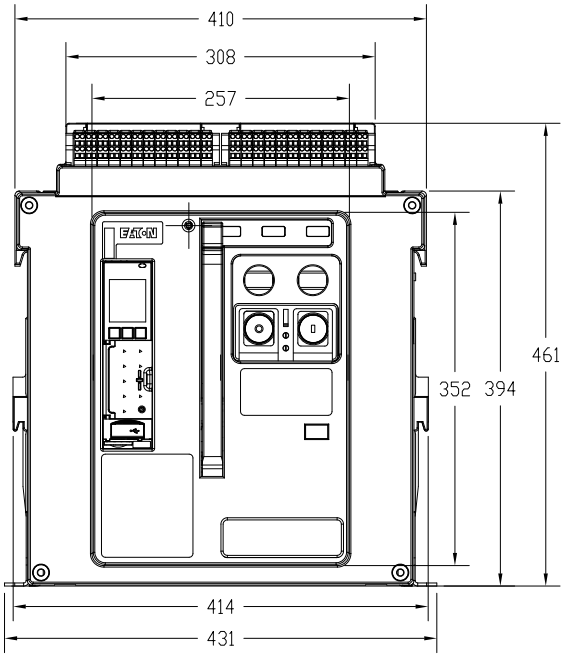

Front view

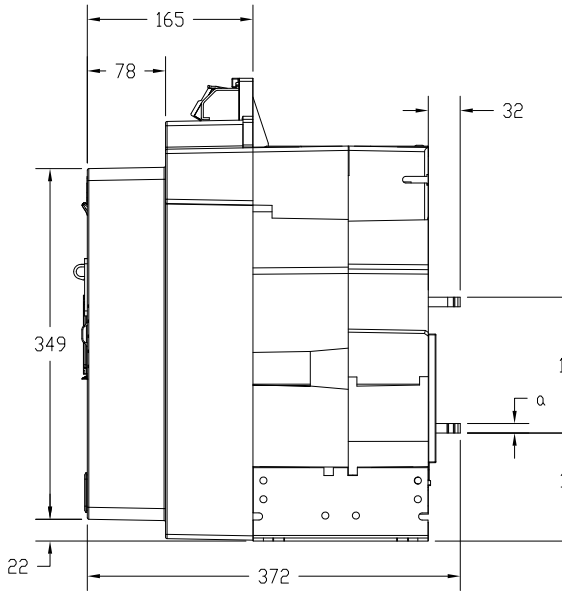

Right view

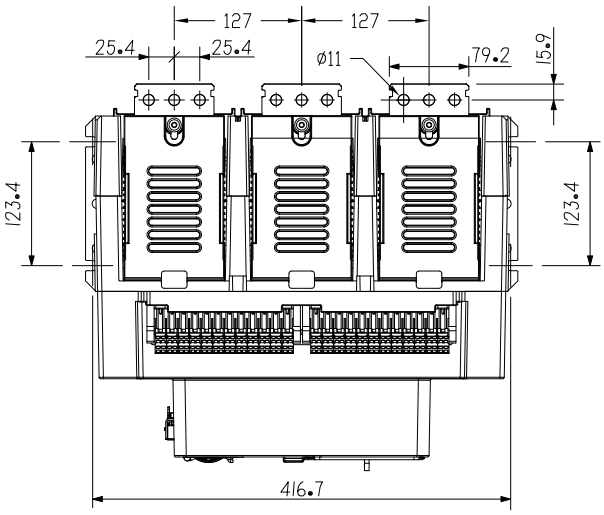

Top view

In(A)	800~2000	2500~3200
a(mm)	9.5	25.4

IZM32 Fixed Type Dimensions and Horizontal Board Dimensions (4P, 800~3200A)

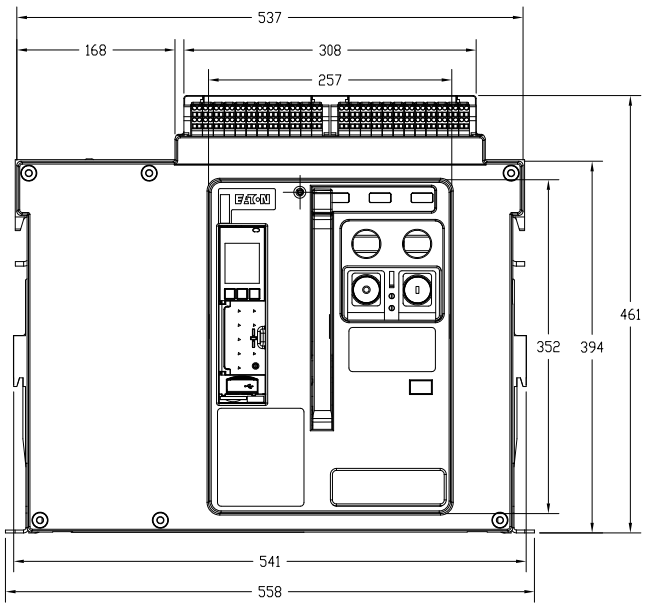

Front view

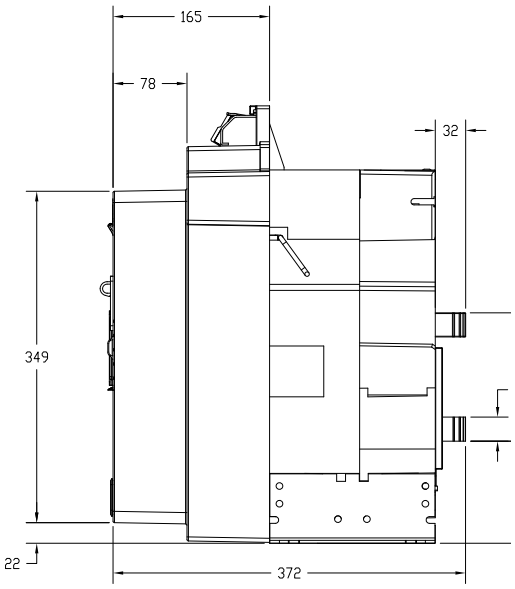

Right view

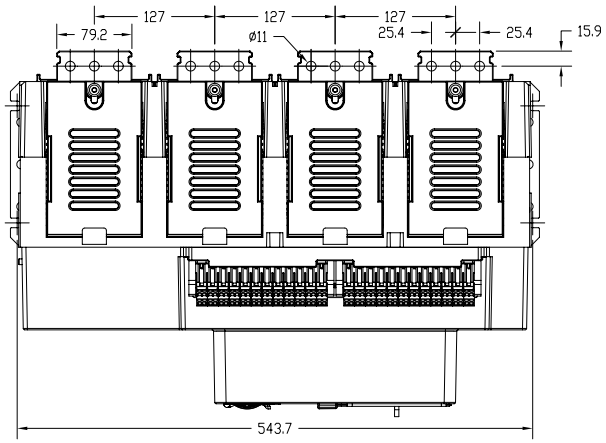

Top view

In(A)	800~2000	2500~3200
a(mm)	9.5	25.4

IZM32 Fixed Type Panel Cutout and External Vertical Board Dimensions (3P and 4P, 800~1600A)

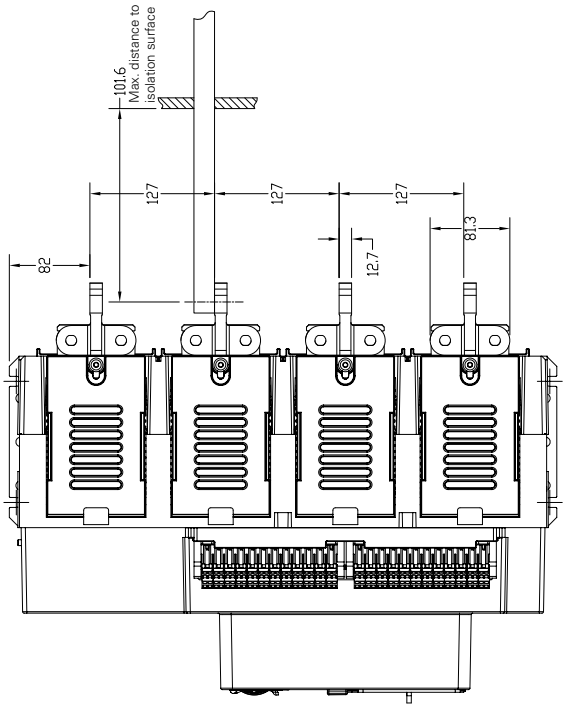

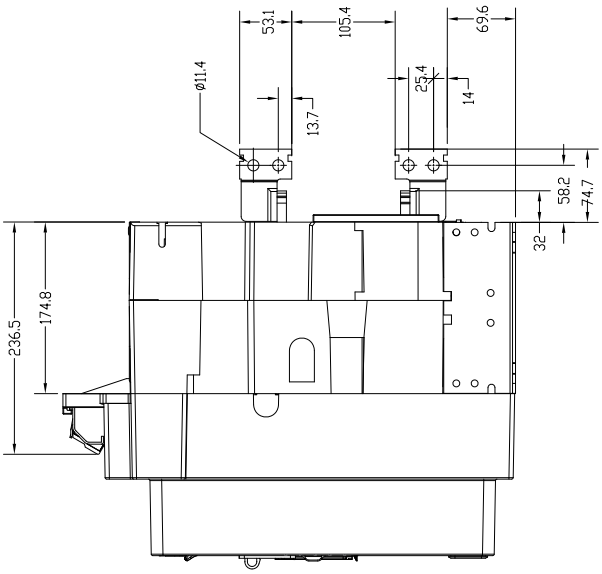

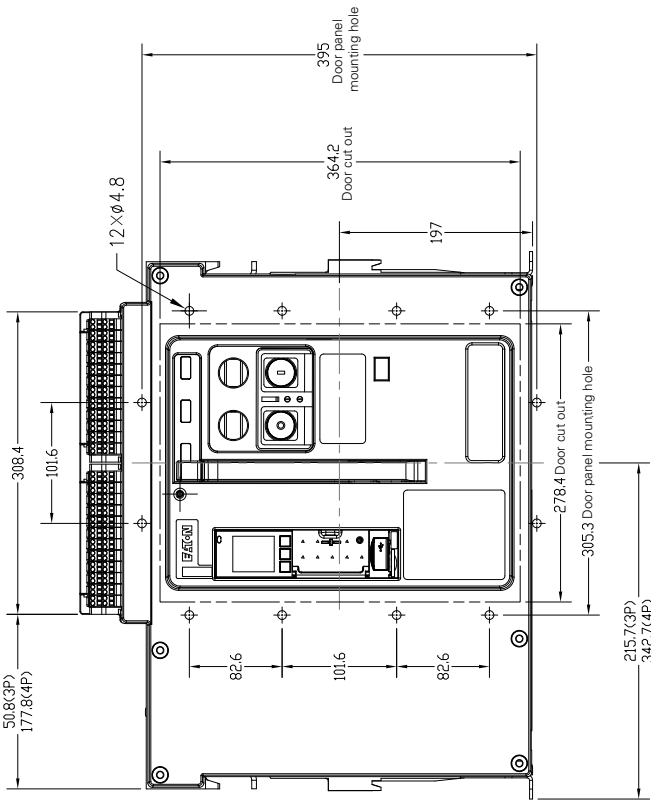

IZM32 Fixed Type External Vertical Board Dimensions (3P and 4P, 2000A)

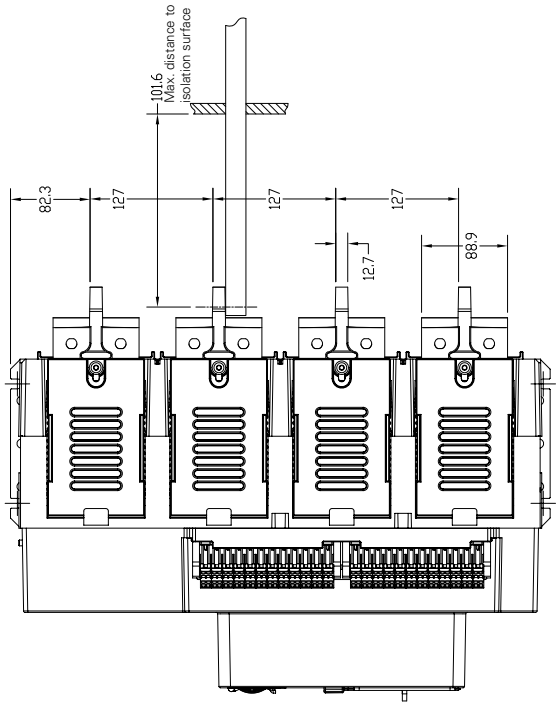

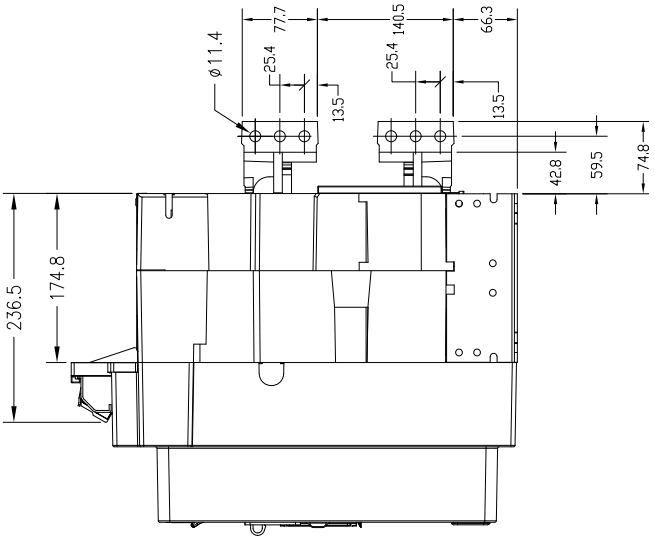

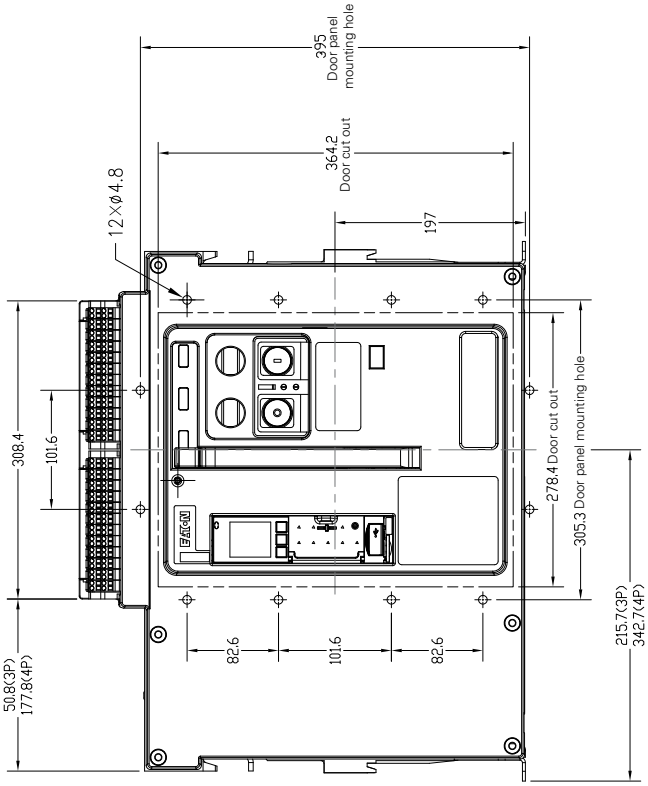

IZM32 Fixed Type External Vertical Board Dimensions (3P and 4P, 2500~3200A)

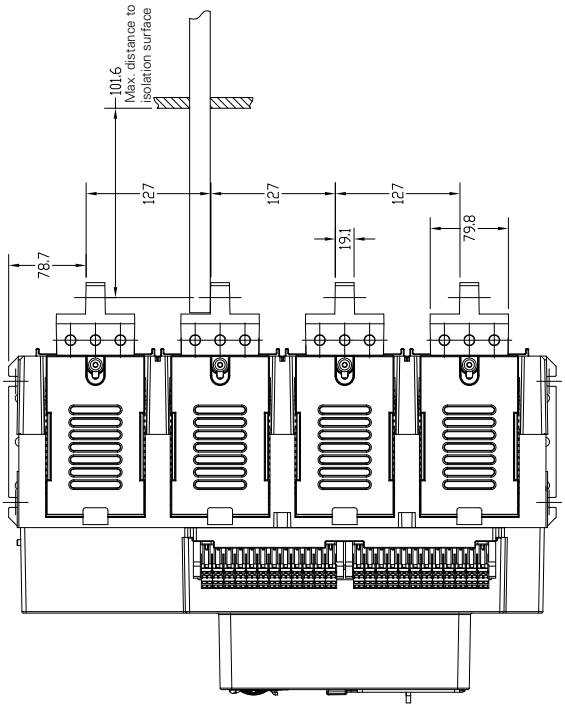

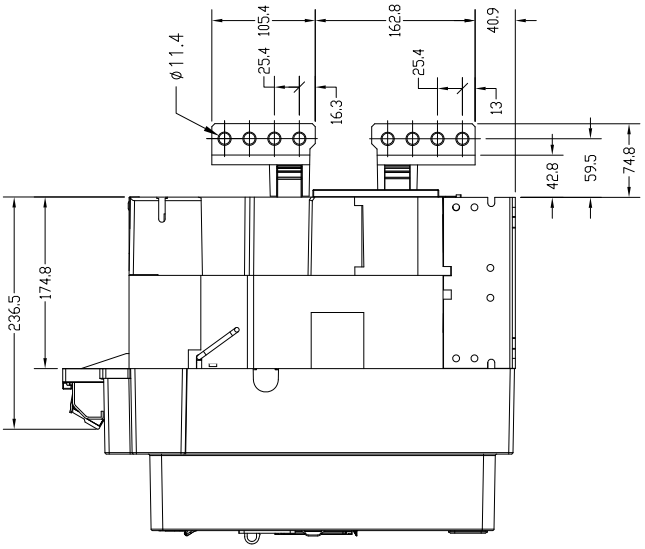

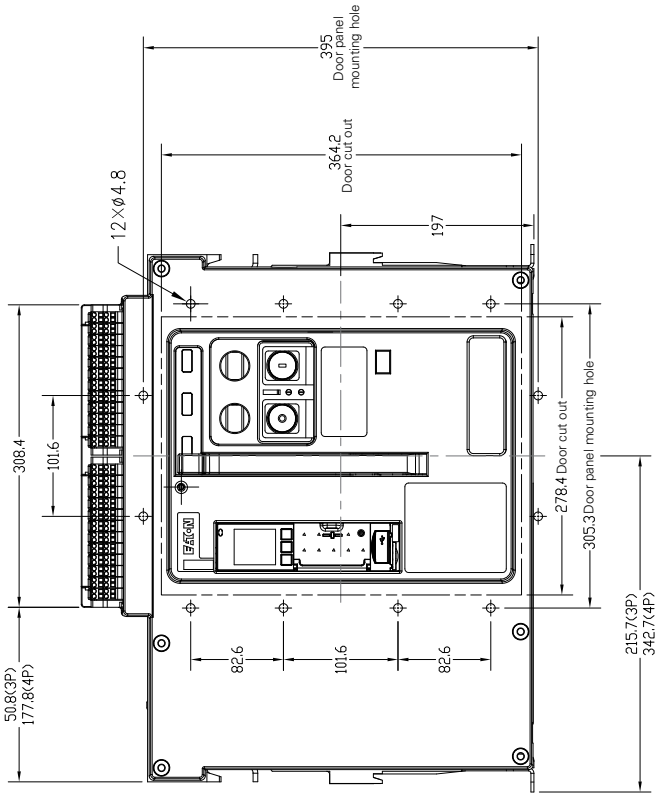

IZM32 Withdrawable Type Dimensions (3P and 4P, 800~3200A)

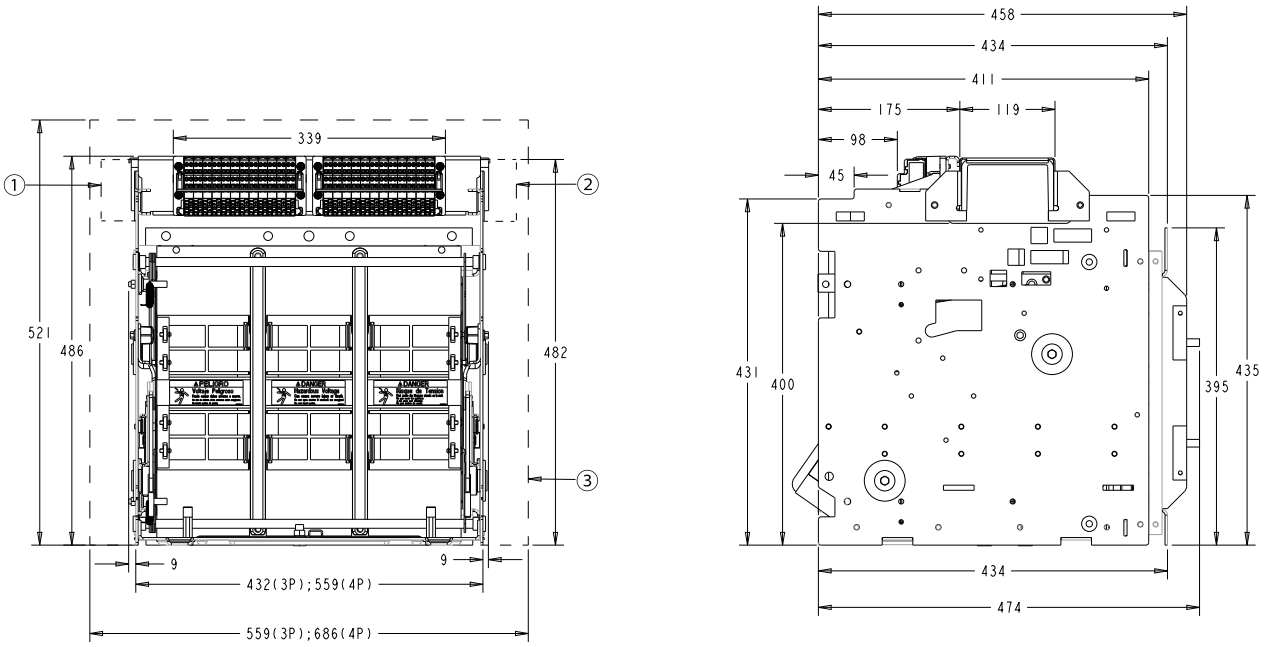

Notes: ①② Drawer switch position ③ Recommended minimum mounting space

IZM32 Withdrawable Type Panel Cutout Dimensions (3P and 4P, 800~4000A)

ITEM	D
3 POLE	6.50 [165.10]
4 POLE	11.50 [292.10]

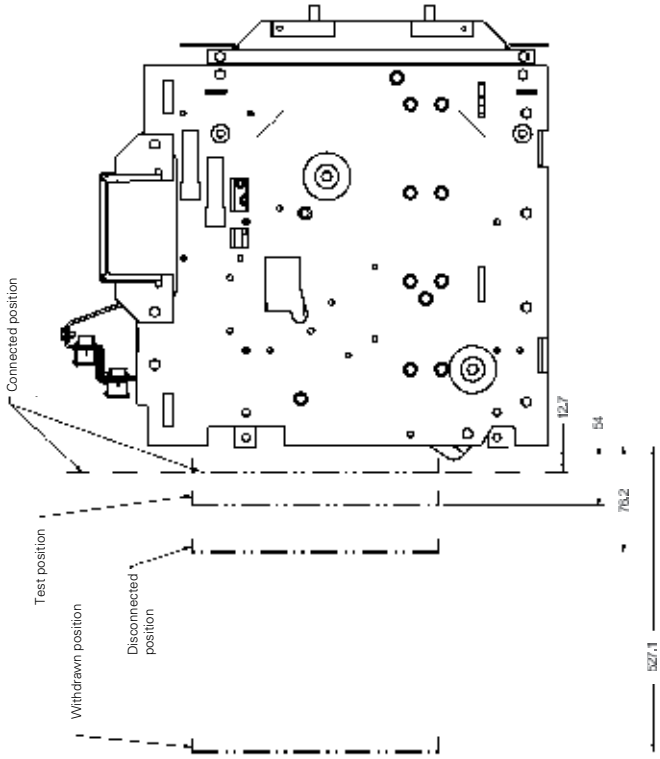

Right View

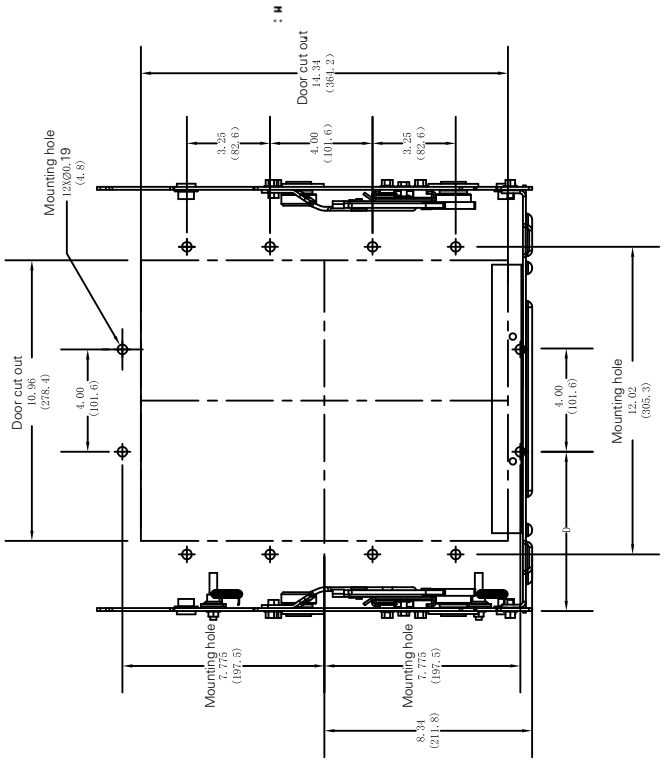

Front View

Panel cutout size and circuit breaker position

Note:
1. Mperial dimensions are Inches on top metric dimensions are [mm] bottom.
2. All dimensions are reference only
3. Tolerance range is shown as follow:

0~5mm	±0.1mm
5~10mm	±0.2mm
10~50mm	±0.5mm
50~200mm	±3.0mm

IZM32 Withdrawable Type Cassette Dimensions and Mounting Dimensions (3P and 4P, 800~3200A)

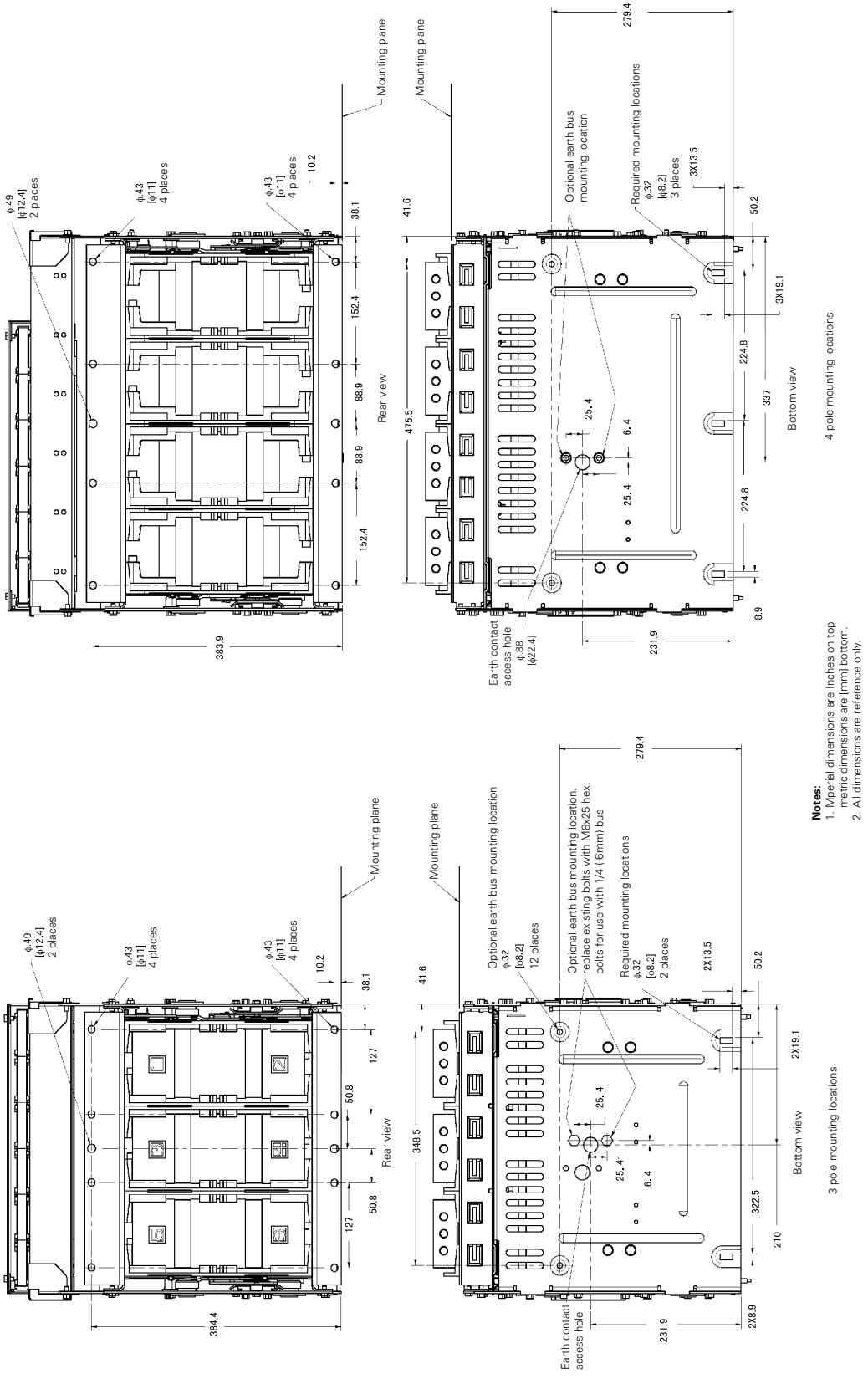

IZM32 Withdrawable Type Cassette Dimensions and Mounting Dimensions (3P and 4P, 4000A)

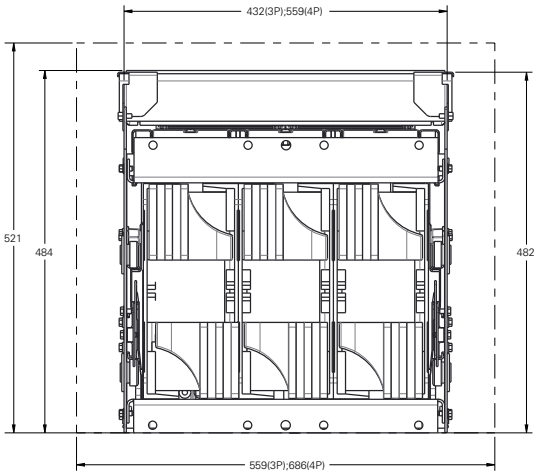

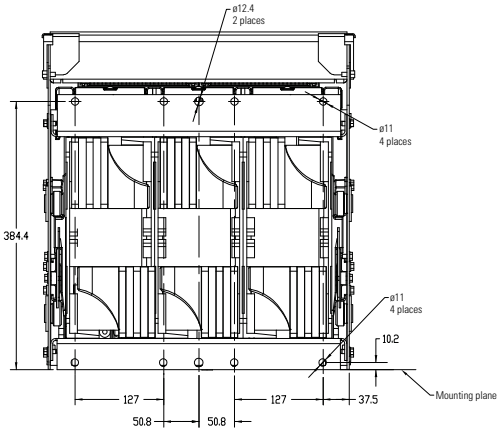

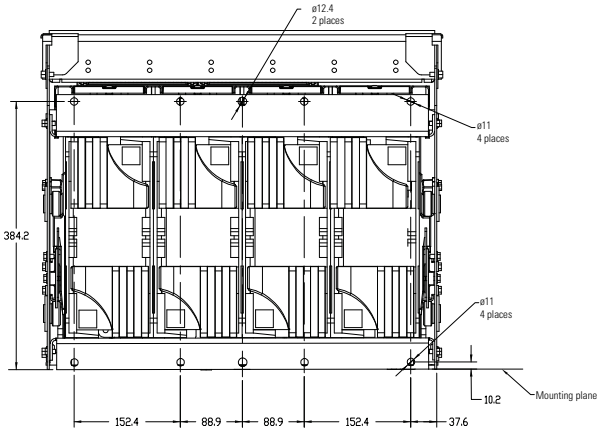

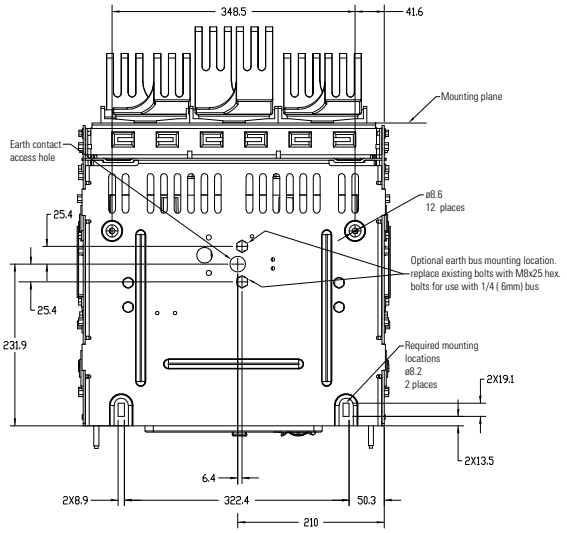

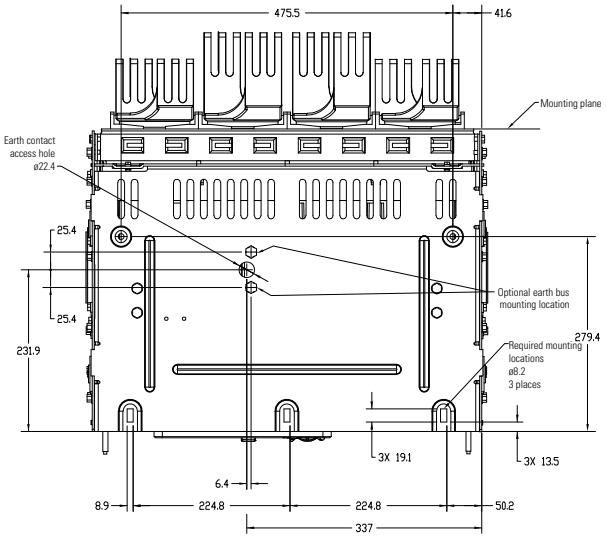

IZM32 Withdrawable Type Cassette Horizontal Board Wiring Dimensions (3P and 4P, 800~3200A)

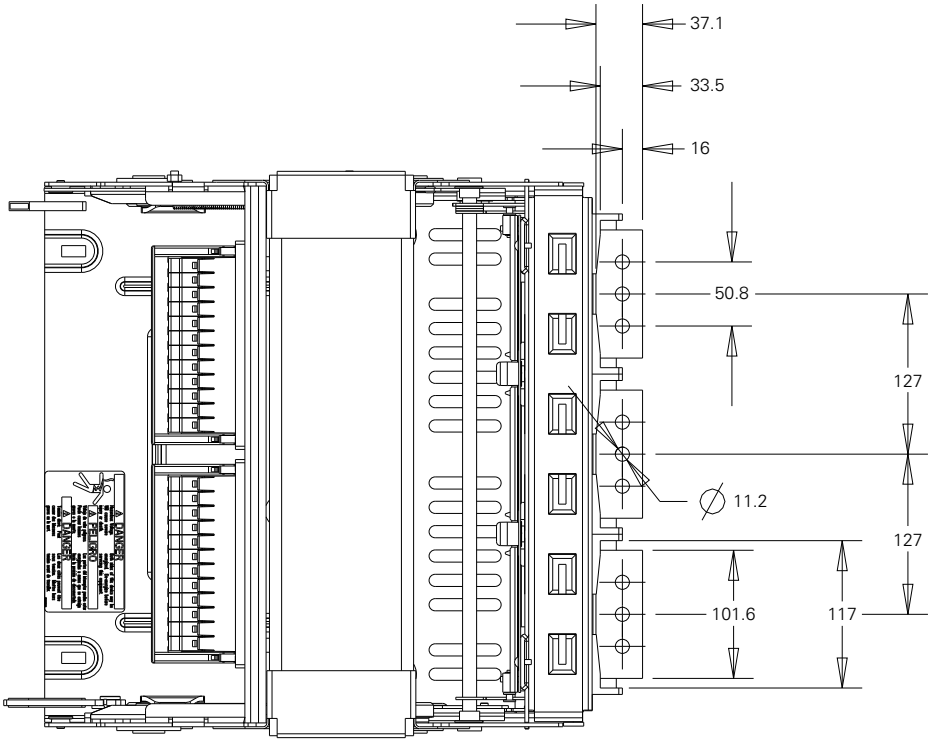

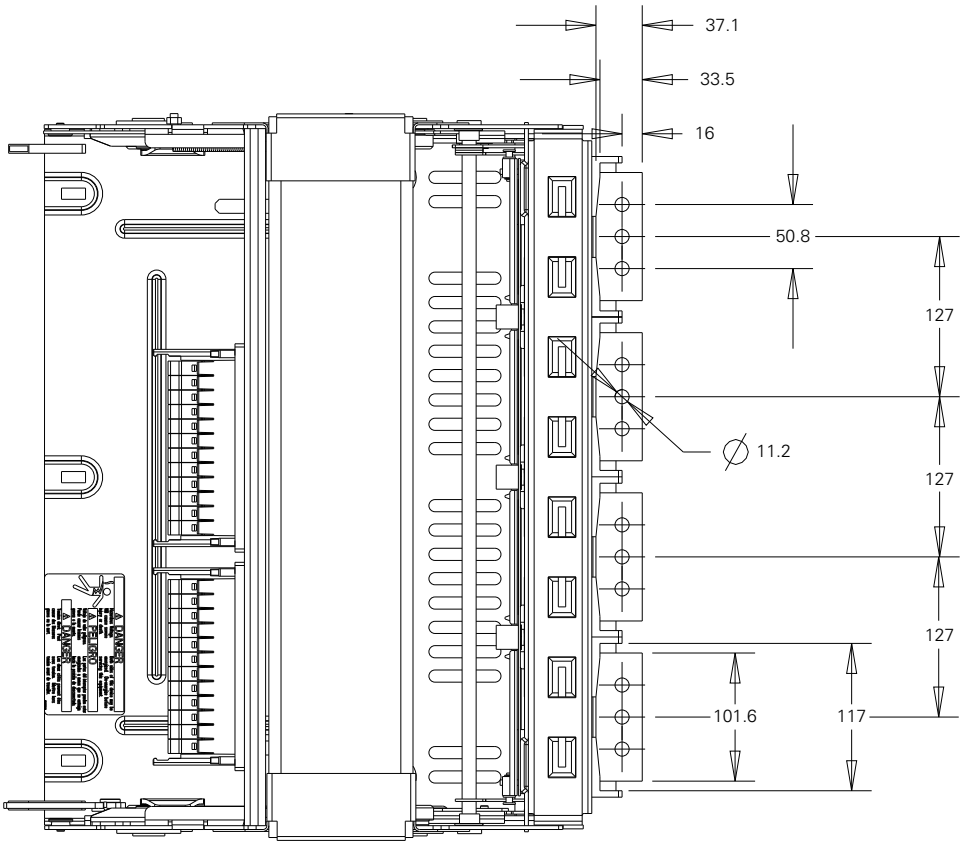

IZM32 Withdrawable Type Cassette Vertical Board Wiring Dimensions (3P and 4P, 4000A)

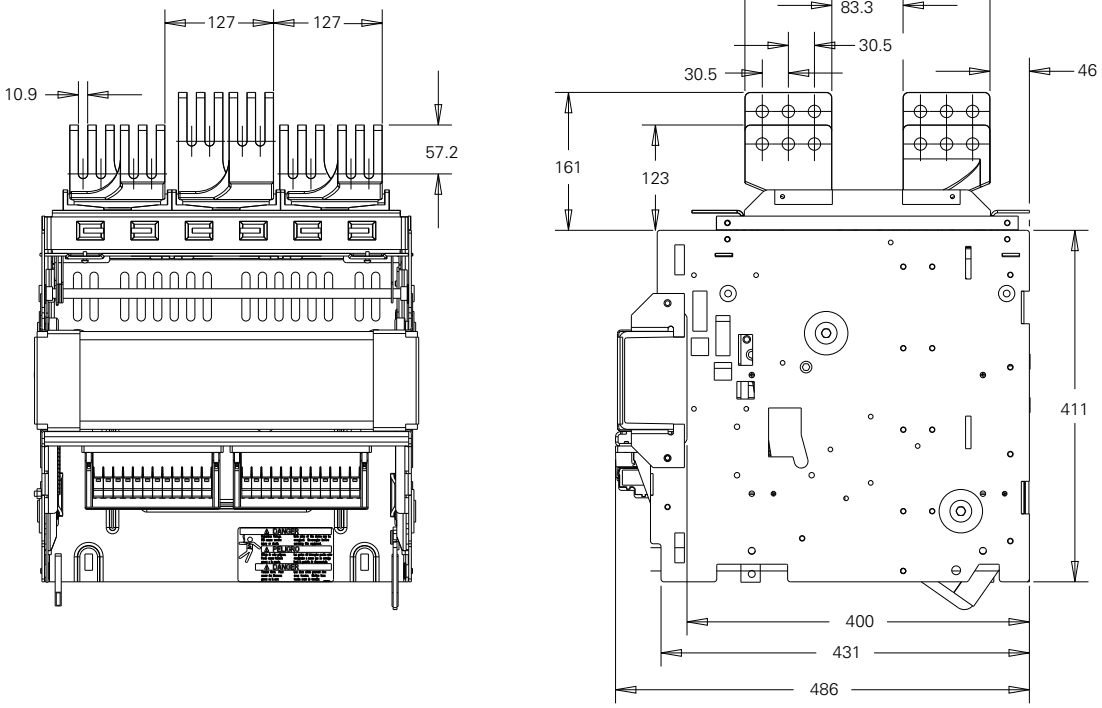

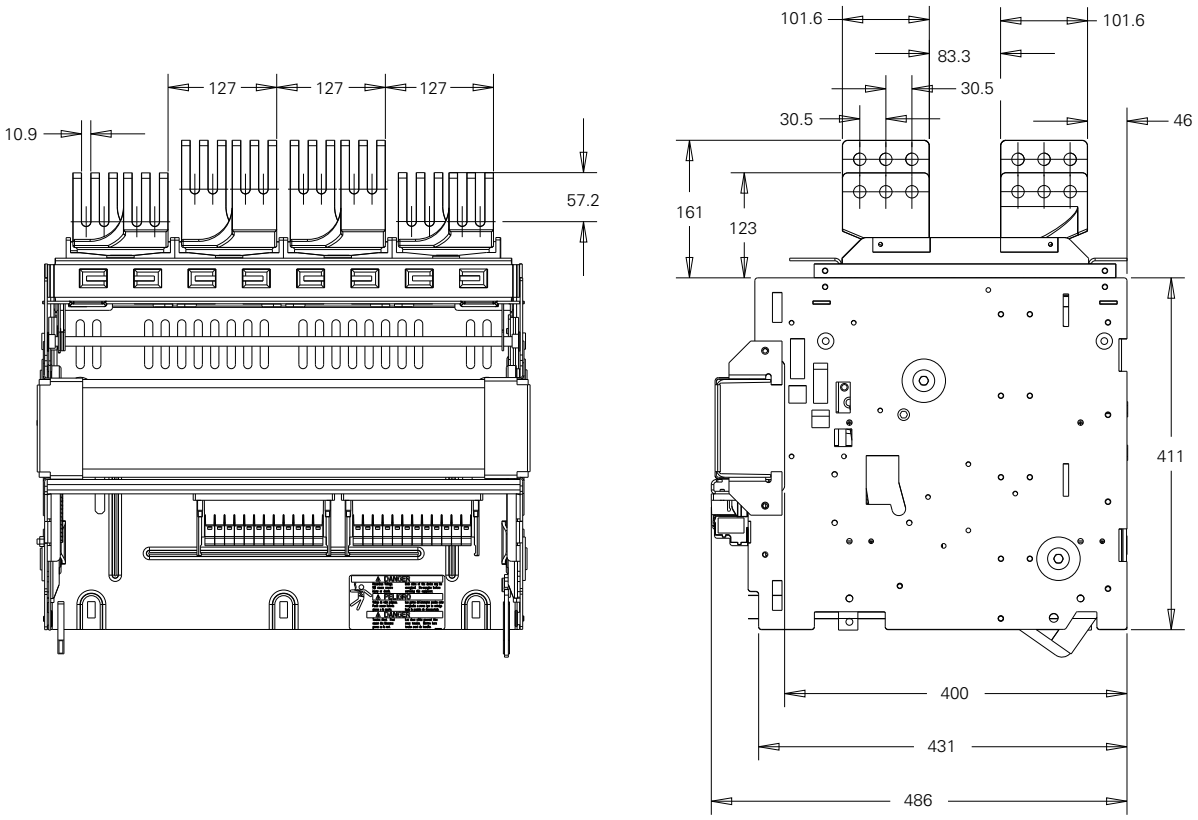

Electrical clearance

The following information about electrical clearance is intended to provide a guideline for the installation of fixed type or drawout type circuit breakers in an enclosure. The diagram and related dimensions can be used for reference.

Electrical clearance dimension (mm)

Breaker type	Enclosure clearance	To insulated surface	To grounded metal surface	With cell switch or locking facilities
Withdrawable	A	0	0	0
	B	25	25	25/75
Fixed	A	150	250	-
	B	30	70	-

Recommended safety clearances

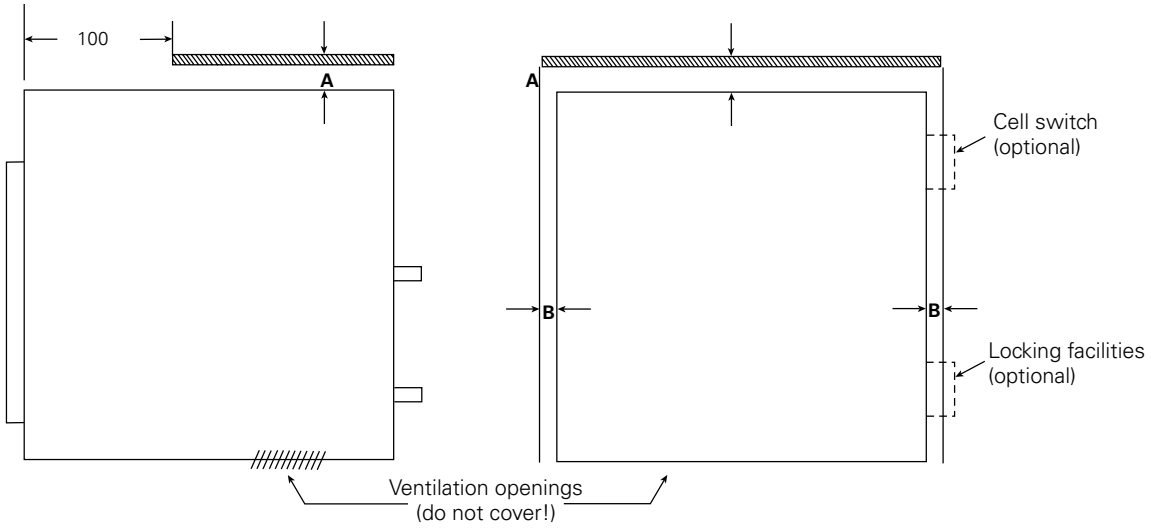

Recommended enclosure clearance and ventilation

The typical enclosure drawing and dimension table is intended as a guideline for designing a circuit breaker enclosure. The enclosure dimensions and required ventilation openings should be considered at the designing phase.

Recommended enclosure/ventilation opening dimensions

W Width	Width of cassette + 75 mm
H Height	550 mm
D Depth	450 mm (front control panel bay)
V Ventilation holes	160 cm² (800 - 3200 A) 320 cm² (4000 A)

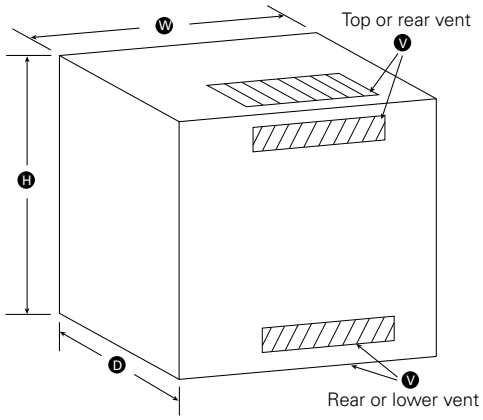



xSpider creates your networks

The xSpider software is a graphic-oriented design system for dimensioning of low-voltage networks fitted with Eaton brand circuit protection equipment.

The software is intended primarily for designers and computational engineers. It includes a new graphics and computing core as well as a new user interface.

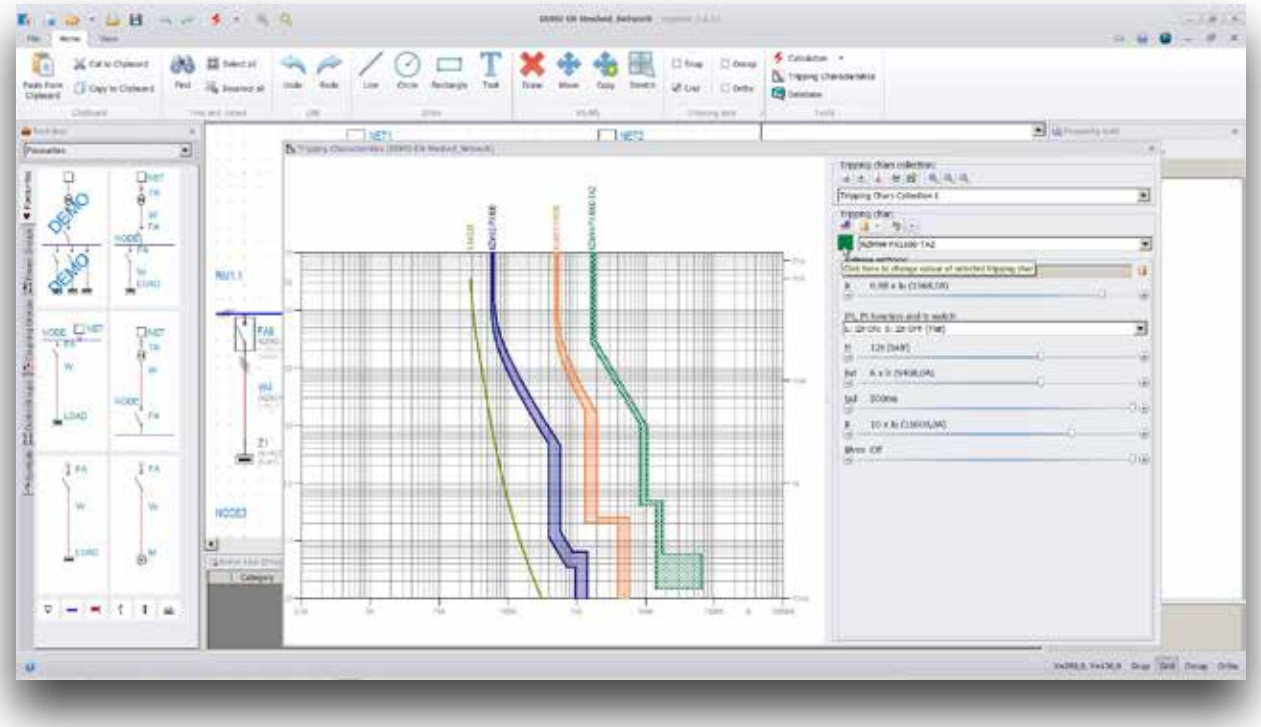

General Features

- Suitable for TN / IT / TT network systems of different voltage systems up to 1,000 V.
- Design of radial as well as meshed networks.
- Operating status manager for simulating various operating states of the network (ON/OFF status of sources and loads).
- Database of components with transparent tree structure, allowing user-defined additions.
- All calculations are based on IEC standards.
- Coordination of protective devices (selectivity, backup protection).
- Tripping characteristics available for all protective devices.
- Generation of documentation (wiring diagram with calculation results, calculation report etc.).

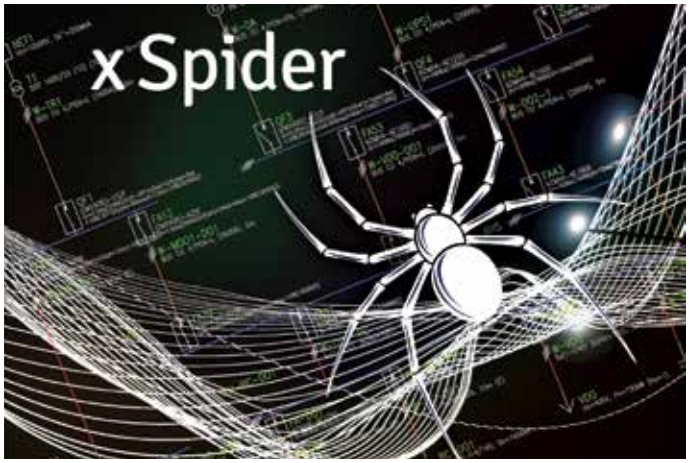

Calculations

- **Voltage drops** in nodal points of the network.
- Load distribution in the network lines.
- Power factor calculation for meshed networks.
- **Three-phase symmetric short circuit** according to IEC 60909.
- Backup protection – checking the breaking capacities of the out-going protective components at the outgoers.
- Selectivity assessment of circuit breakers according to tripping characteristics and selectivity tables.
- **Single-phase asymmetrical short circuit current.**
- Calculation of the disconnection time and check on compliance with the requirements of IEC 60364-4-41.

Displaying of results

- Calculation is followed by a display of the list of non-compliant elements (in parallel with the wiring diagram).
- After the calculation has been performed, the calculated values will be displayed for the individual components in the network wiring diagram.
- The results diagram is printable. It can be printed on any output device, for which a driver is available in Windows (printer, plotter).
- After calculation, a comprehensive report on the calculation can be generated and printed.

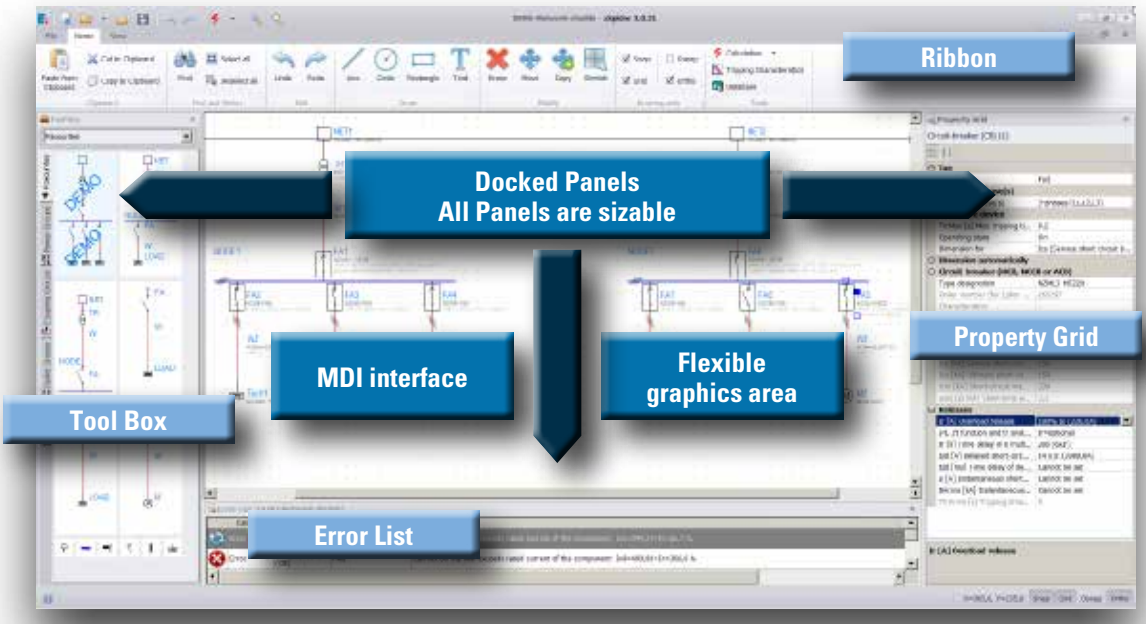

User operation similar to standard CAD systems (AutoCAD)

Working with tripping characteristics

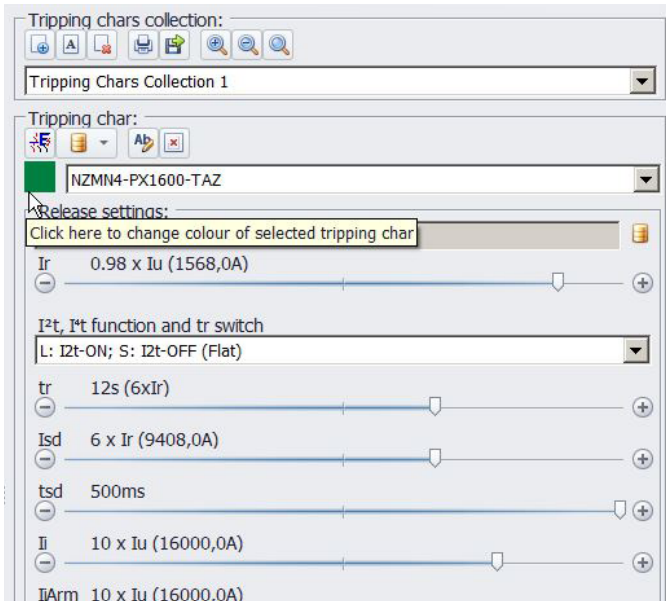

Setting of parameters for selected circuit breaker tripping characteristic

- The dialogue box with the tripping characteristics is shown in parallel with the wiring diagram.
- Selection of a protective device from the database and rendering of its tripping characteristic (including tolerance range if the necessary data is available).
- Selection of protective equipment from the network wiring diagram and drawing of its tripping characteristics – selectivity assessment possible.
- If a circuit protection device is equipped with adjustable releases, it is possible to modify all available parameters. If this was a device from the wiring diagram, the change of the release parameter setting is transferred back into the wiring diagram.
- It is also possible to work with the tripping characteristics independently, i.e. without drawing a wiring diagram.

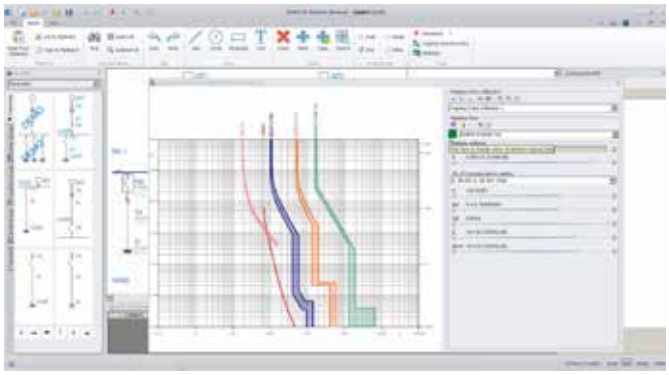

Tripping characteristic of protective devices

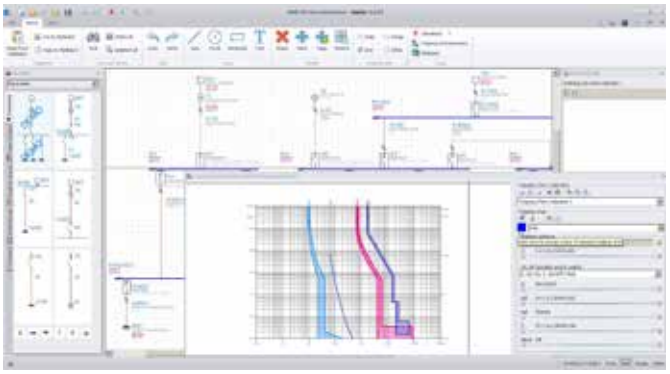

Tripping characteristic with activated Arcflash Reduction Maintenance System™

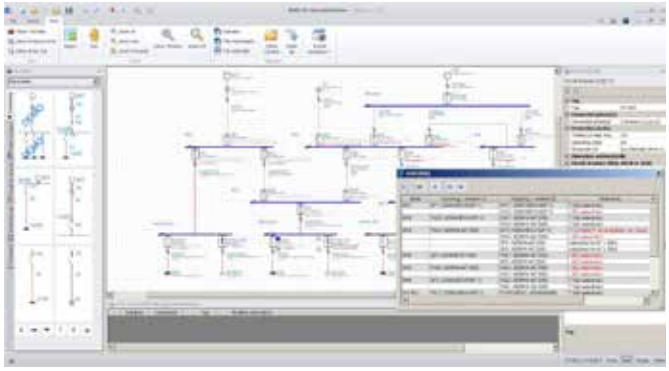

Complex evaluation of selectivity and backup protection



Calculation of short circuit current values in various nodes of electrical installations.

How to obtain the xSpider software

Go to the xSpider homepage:

1) www.eaton.com/xspider
2) Search with any explorer (Google) for terms such as: xSpider, or xSpider Eaton etc.

- Download the xSpider software *)
- Installation of xSpider to a computer
- xSpider icon is displayed on the screen – click on it
- Start

*) available also:

- PowerPoint presentations – quick overview of features
- User manual is part of installation or available separately as a PDF file
- Instruction videos help to quickly understand operation.

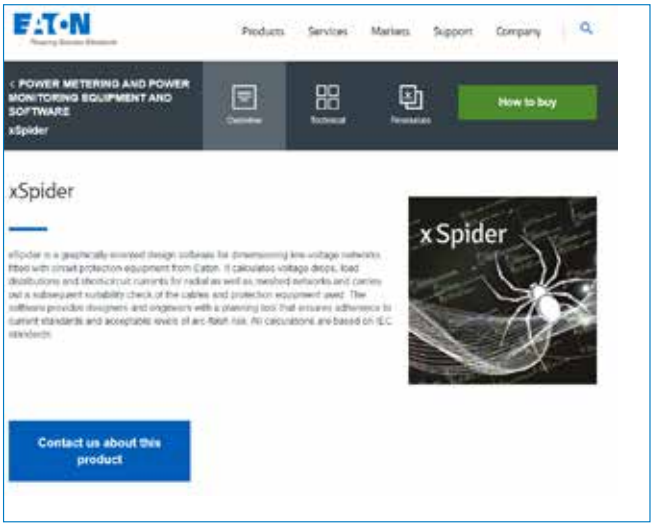

www.eaton.com/xspider

How to start the first job

The most effective way for quick learning is to start with the selected "DEMO Network" drawing, then look at Videos and follow the User manual, Part III.

1 DEMO drawing

Ready drawings with explanation of basic features. The DEMO drawing contains all basic components and allows immediate work with all xSpider features.

2 Videos

Typical situations in the everyday use of xSpider

3 User manual

Step-by–step explanation in Part III:

Part I: Theoretical Introduction
Part II: Program Operation
Part III: Solved Examples



The Eaton online catalogue

THE PRODUCT GROUP TREE

- Information
- Control circuit devices
- (Safety) position switches/sensors
- Pressure switches
- Cam switches, switch-disconnectors up to 315 A
- Timing and measuring relays
- Safety relays, safety control relays
- Control relays, multi-function-display
- Touch panel, PLC, I/O expansion
- Contactors
- Overload relays
- Motor-protective circuit-breakers
- Motor-starter combinations
- Soft starters
- frequency inverters
- distributed drives engineering
- Compact circuit-breakers up to 1600 A
- Compact switch-disconnectors up to 1600 A
- Circuit breakers up to 6300 A
- Switch-disconnectors up to 6300 A
- Miniature circuit-breakers
- Transformers

The product group tree: Clear layout of the Eaton products in product groups.

The one-dimensional product structure ensures the user can easily locate the product with a few clicks.

THE SEARCH

Contactor
- adapter for contactor
- amplifier module for contactor
- auxiliary contactor
- auxiliary contactor relay
- bridge for contactor
- cable terminal block for contactor
- capacitor contactor
- coil for contactor
- connector for contactor
- contactor
- contactor accessories
- contactor amplifier module
- contactor coil
- contactor



Search/result list: high performance search with suggestion list by “Entry”.

A suggestion list brings the search an above-average success rate, because nothing makes less sense than a 0-hit result.

SELECTION AIDS







The selection tools: 3 clicks to product

Selection-relevant features allow users to locate their products easily, without problems. From general to specific to product – 3 clicks!

The catalogue portal is the entry page to the Online Catalogue. Important elements include the powerful search function and the graphical navigation. The clearly designed user interface makes the application particularly easy to use.

Continuous updating ensures that you will always find the latest product data and news. https://ecat.eaton.com/



Eaton is an intelligent power management company dedicated to improving the quality of life and protecting the environment for people everywhere. We are guided by our commitment to do business right, to operate sustainably and to help our customers manage power - today and well into the future. By capitalizing on the global growth trends of electrification and digitalization, we're accelerating the planet's transition to renewable energy, helping to solve the world's most urgent power management challenges, and doing what's best for our stakeholders and all of society.

Founded in 1911, Eaton has been listed on the NYSE for nearly a century. We reported revenues of $19.6 billion in 2021 and serve customers in more than 170 countries. For more information, visit www.eaton.com. Follow us on Twitter and LinkedIn.



To contact us please visit **https://www.eaton.com/contacts**
For technical questions please contact your local Eaton team.

Eaton Industries (Austria) GmbH
Scheydgasse 42
1210 Vienna
Austria

Eaton
EMEA Headquarters
Route de la Longeraie 7
1110 Morges, Switzerland
Eaton.eu

Changes to the products, to the information contained in this document, and to prices are reserved; as are errors and omissions. Only order confirmations and technical documentation by Eaton is binding. Photos and pictures also do not warrant a specific layout or functionality. Their use in whatever form is subject to prior approval by Eaton. The same applies to trademarks (especially Eaton, Moeller, and Cutler-Hammer). The Terms and Conditions of Eaton apply, as referenced on Eaton Internet pages and Eaton order confirmations.

© 2022 Eaton
All Rights Reserved
Publication No. CA0135004EN
Article number Y7-500361-MK
June 2022

Eaton is a registered trademark.

All other trademarks are property of their respective owners.

Follow us on social media to get the latest product and support information.

Powering Business Worldwide

9101065300294 9